Current status of Large-scale Cryogenic Gravitational wave Telescope (LCGT) Project

LCGT Collaborators

ICRR, Univ. of Tokyo
Natinal Astronomical Observatory of Japan,
High Energy Accelerator Research Organization,
Phys.S. Univ. of Tokyo,
GSFS Univ. of Tokyo,
F.Eng. Univ of Tokyo,
Tokyo Institute of Technology,
Osaka City Univ.,
Phys.S. Kyoto Univ.,
Electro Communication Univ.,
ERI. Univ of Tokyo,
Astro. Univ. of Tokyo,
Hosei Univ., AIST,
NICT,
Phys.S. Osaka Univ.,
YITP Kyoto Univ.,
Phys.S. Ochanomizu Univ.,
ARISH Nihon Univ.,
S.Niigata Univ.,
Yamanashi-Eiwa Univ.,
CIT Nihon Univ.,
FST Hirosaki Univ.,
S. Tohoku Univ.,
S. Rikkyo Univ.,
S. Hiroshima Univ.,

Sinji Miyoki and LCGT Collaboration
Institute for Cosmic Ray Research and LCGT Collaboration

TAUP2011 @ Munich Sept 8th 2011

LCGT Collaborators

S. Ryukyu Univ.,
FSE Waseda Univ.,
Gunma Astronomical Observatory,
Max Plank Inst. AEI,
California Institute of Technology,
Phys.S. Univ. of Western Australia,
Louisiana State Univ.,
CCRG Rochester Institute of Technology,
Astro. Beijing Normal Univ.,
Inter-University Center for Astronomy and Astrophysics, Moscow Univ.,
LATMOS/CNRS,
Univ. of Science and Technology of China,
Inst. for High Energy Physics of Chinese Academy of Sciences,
Peking Univ.,
CMS ITR Taiwan,
Maryland Univ.,
Columbia Univ.,
Glasgow Univ.,
Sannio Univ.,

LCGT Highlights

LCGT highlights are …

(1) Underground → Stable Operation owing to low seismic noise.

(2) Usage of Cryogenic Mirrors and suspensions

→ Reduction of Thermal Noise

(3) Collaboration with Geophysical Laser Strain-meter

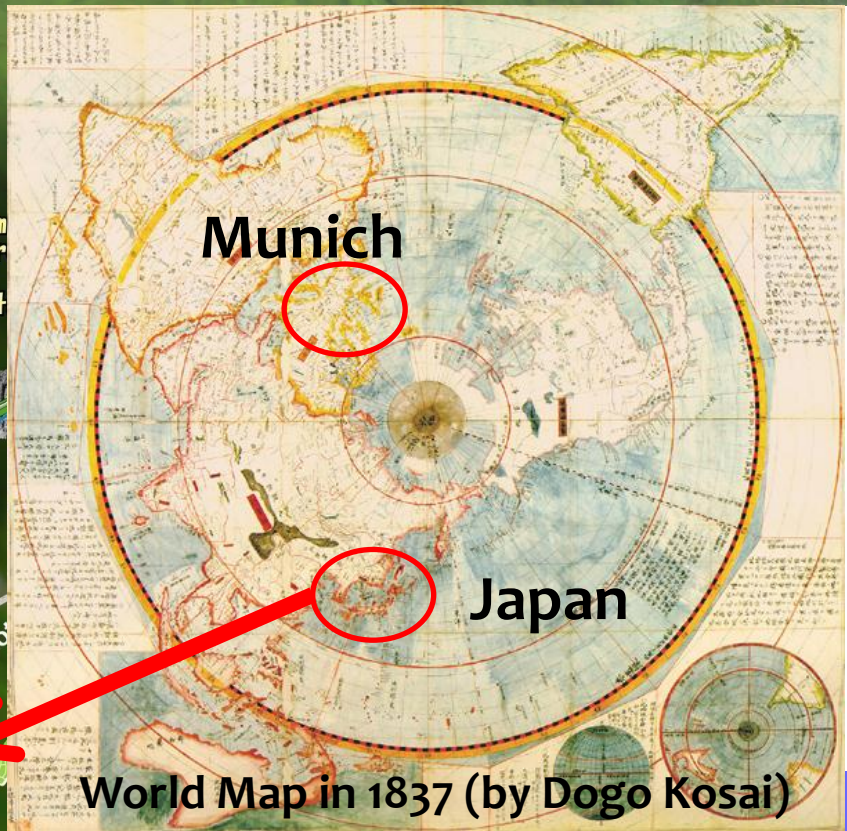

World Map in 1837 (by Dogo Kosai)

LCGT Budget

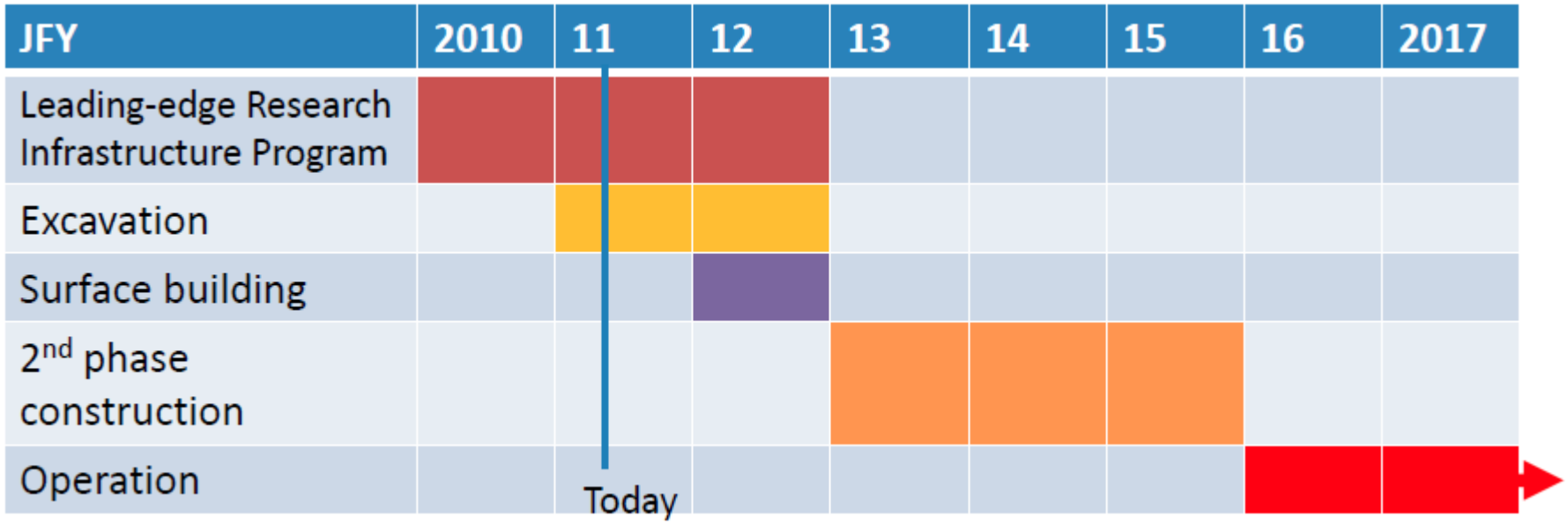

→ No problem (so far).

→ A half of year delay, but it was approved.

→ In the Univ. of Tokyo budget request item To MEXT. But not optimistic at all.

→To be requested.

T.Kajita

LCGT Construction Schedule

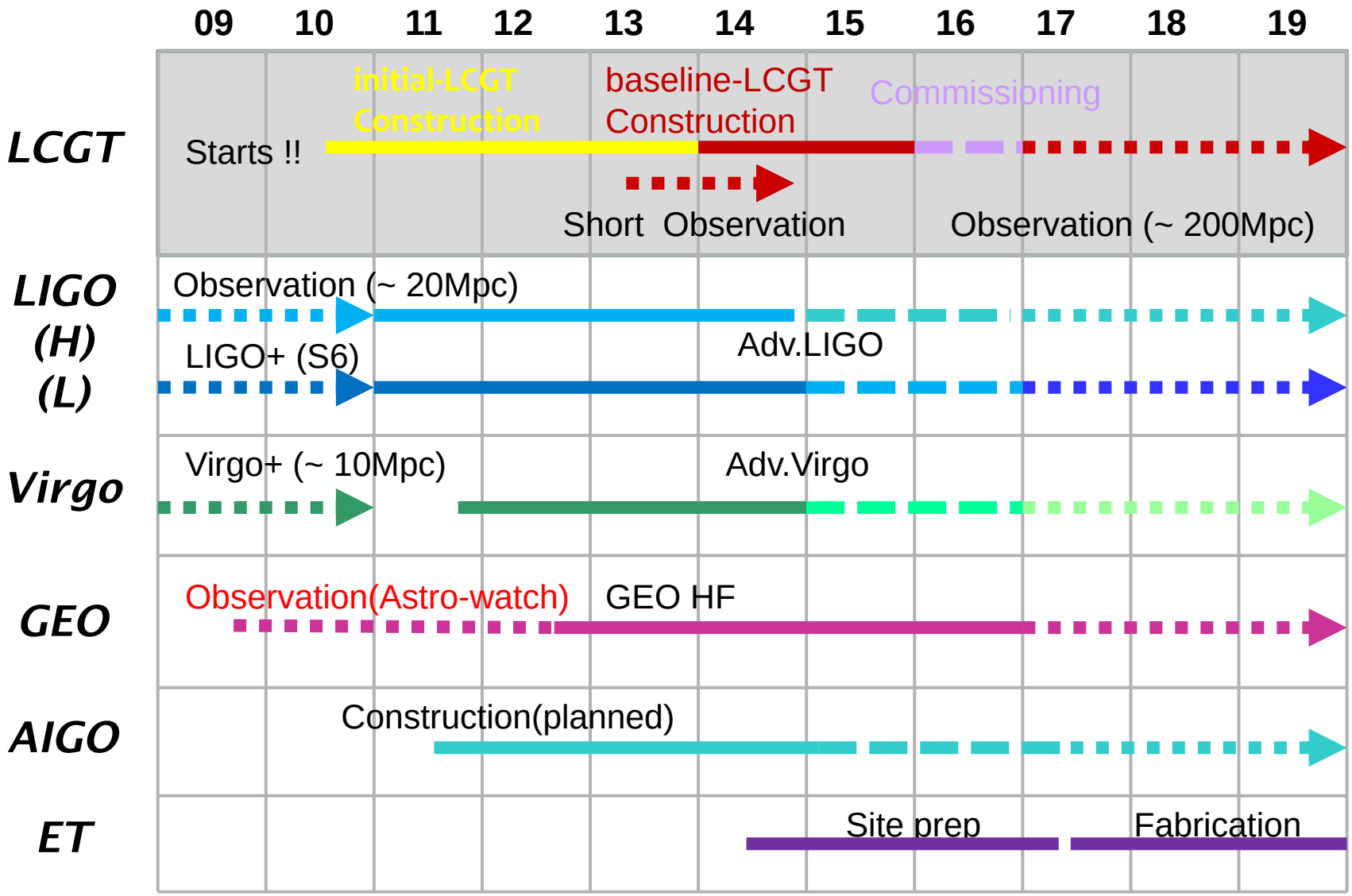

LCGT Organization

LCGT Council
Director of ICRR NAOJ, KEK and Representation of Gravity Research

Project Integrator
T.Kajita

Program Advisory Board
S.Whitcomb, B.Mours, B.Shutz, G.Sanders, D.McClelland, M.Iye, A.Yamamoto, T.Nakamura

Executive Committee
I.Nakatani, K.Kuroda, M.Ohashi, N.Mio, S.Kawamura, M.Ando

SE Office
S.Kawamura, M.Ando, K.Somiya, S.Miyoki

Executive Support
Y.Saito, T.Suzuki, N.Kimura, R.Takahashi, N.Kanda, S.Miyoki, T.Uchiyama, O.Miyakawa

Data Analysis	Kanda
Fascility Support	TBD
Vacuum	Saito
Mirror	Mio
Digital System	Miyakawa
In/Out Optics	Telada
Laser	Mio
Doc	Miyakawa Miyoki
Tunnel	Uchiyama
Vibration Isolation	Takahashi
Cryo – genics	Suzuki
Main IFO	Aso
Analog Electronics	Moriwaki
Auxiliary Optics	Akutsu
GEO IFO	Araya

Collaboration 1

- With LIGO
  - Some members visits and help, LIGO mirror rent, Design tool for IFO, Digital Control system, DCC access.
- With VIRGO
  - ICRR-VIRGO meeting, Exchange of academic agreement (Pro. Fidecaro, Pro. Flaminio, Pro Mours, Pro Ricci).
  - Italy-Japan conference will be held in October in Tokyo.
- With GEO
  - MOU with Glasgow Univ., (Pro.Hough) AEI., Collaboration on some R&Ds about suspension and optical coating mechanical loss.
- With University of Sannio
  - Academic agreement, Researcher exchange, and so on (Pro. De Salvo).
- With SUCA
  - Academic agreement, Collaboration on advanced IFO and data analysis (Pro. Ni).

K.Kuroda

Collaboration 2

- With NIKHEF
  - Collaboration on SAS system (Pro. Jo van den Brand).
- With ET
  - IRSES program between EU and Japan might be approved in 2012-2015?
  - Collaboration on SAS and suspension system.
- With US group
  - Collaboration on 3rd generation detector in USA (Pro. W. Johnson).
- With Korean Group (KGWG, KIAS)
  - Collaboration on laser and optics, data analysis (Pro.Yoon).

initial-LCGT (2010~2013)

- **Fabry-Perot Michelson Interferometer**
  - •Mirrors and suspensions are set at room temperature.
  - •SiO_2 Mirrors.
  - •10W level laser sources
  - •Negligible thermal distortion of mirror shape.
  - •RF readout
  - •Low frequency seismic noise isolation function in SAS are disable

- **Targeted Sensitivity (for compact binary coalescences)**
  - 5Mpc (SNR=8, Sky Averaged)
  - Displacement noise is limited by seismic and shot noise.

- **Short Observation (for thrashing out problems)**

baseline-LCGT (2013~2015~2016)

- **Toward the Targeted Sensitivity**
  - Cryogenic mirrors and suspensions (sapphire)
  - 200W~ 25W Laser (Mitsubishi-Amp or Fiber-Amp)
  - RSE technique (Broadband or Detuned in Variable RSE)
  - DC readout technique
  - Output Mode Cleaner
  - SAS full operation

Possible Sensitivity Limit of LCGT

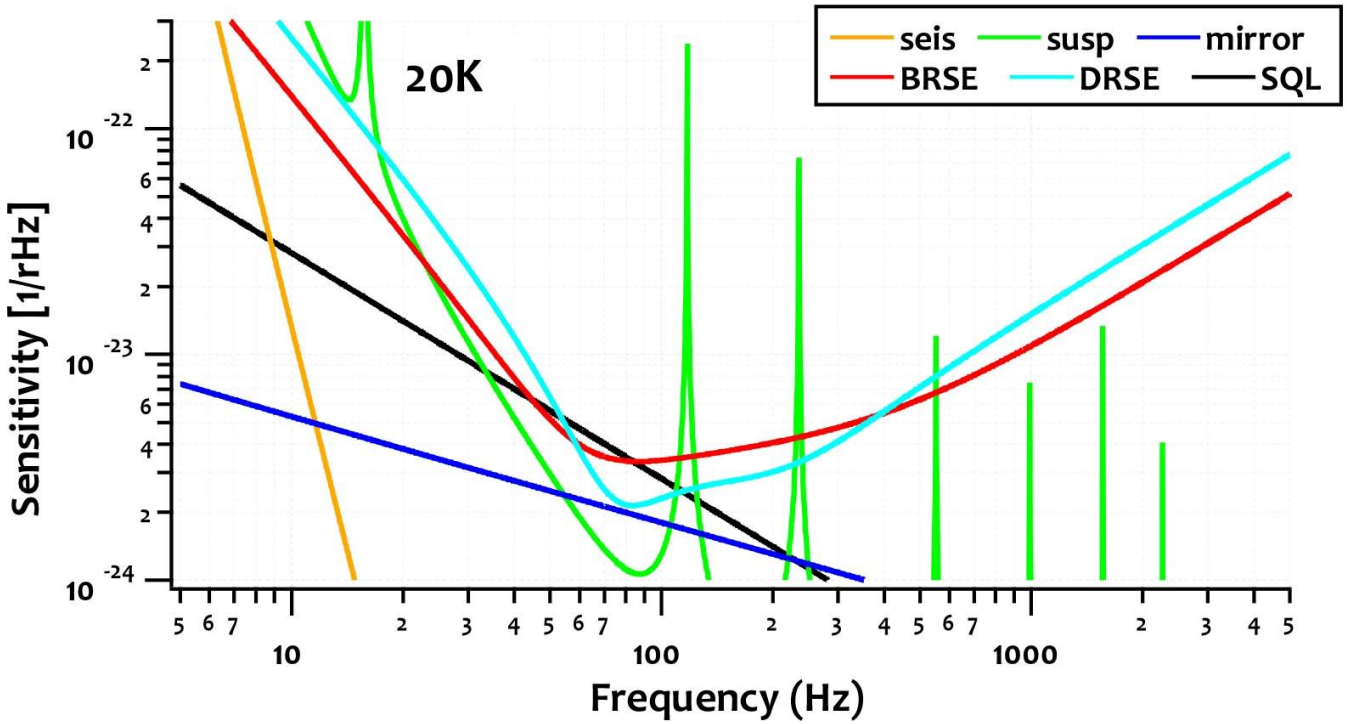

- In order to attain the sensitivity to catch the event at ~231Mpc (SNR=8), we need to reduce shot noise determined by 800kW optical power (400 kW).
- Thermal noise of the mirror, coating of the mirror, and suspension need to be suppressed by cryogenic temperature, 20K. Mechanical losses of these parts are required to satisfy this thermal noise limit; they are 10^{-8}, $4X10^{-4}$, 10^{-8}
- Final sensitivity is limited by quantum noises in the observation frequency band, 230Hz. Radiation pressure noise is determined both by the optical power and by mass, 30kg→??.

GW detection network

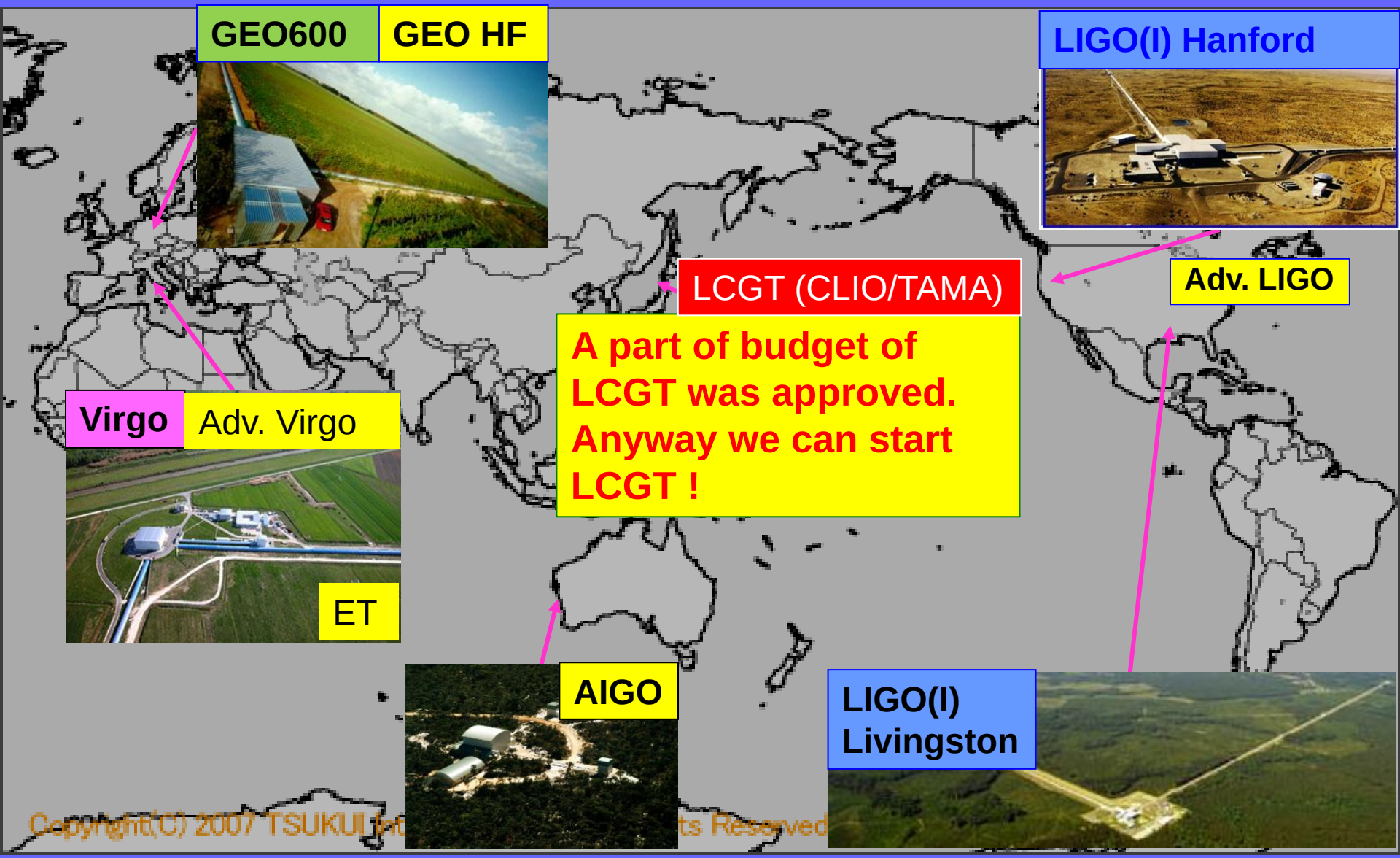

LCGT contribution in the world network for GW detection

(1) Long distance between GWDs
(20 mili-seconds time flight among North America, Europe and Asia)
(2) Angular dependence of GWDs

LCGT and LIGO/H-LIGO/L-Virgo can cover almost 100% of the sky.

33% coverage

L/H+L/L 50%

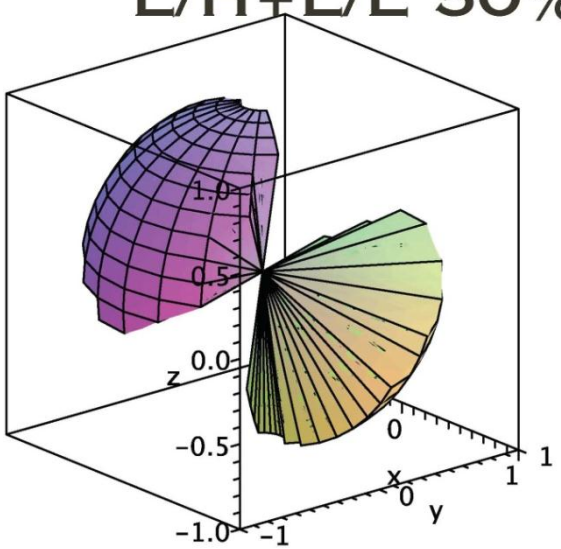

By global network

L/H+L/L+V 50%

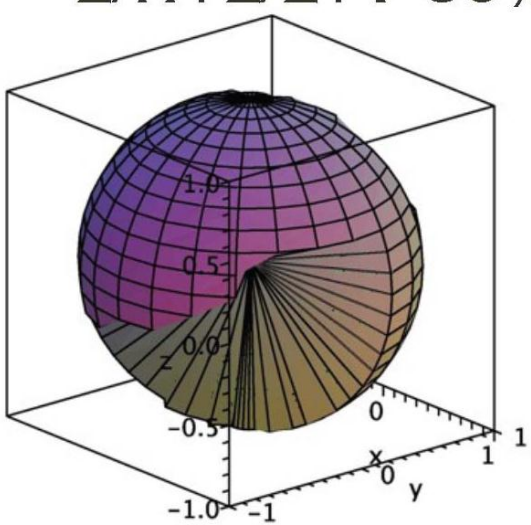

100% coverage

L/H+L/L+V+LCGT 50%

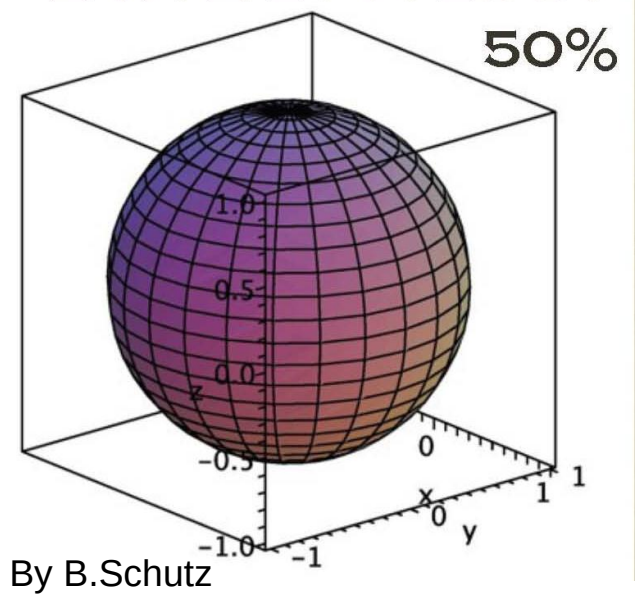

By B.Schutz
(@Fujihara seminar, May 2009)

LCGT Excavation

(Budget including excavation was finally approved in August 2011 (← April 2011))

Location of Center (BS)

- latitude: 36 .42°N, longitude: 137.30 °.
- X arm direction: 300°, Y arm direction: 30 °.
- Height from the sea level : about 372.000m.

- 2 ~~X~~ entrances for the experiment room.
- Center, Xend, Yend are inside more than 200m from the surface of the mountain.
- Tunnel floor is tilted by 1/300 for natural water drainage.
- Height of the Xend: 382.095m.
- Height of the Yend: 362.928m.

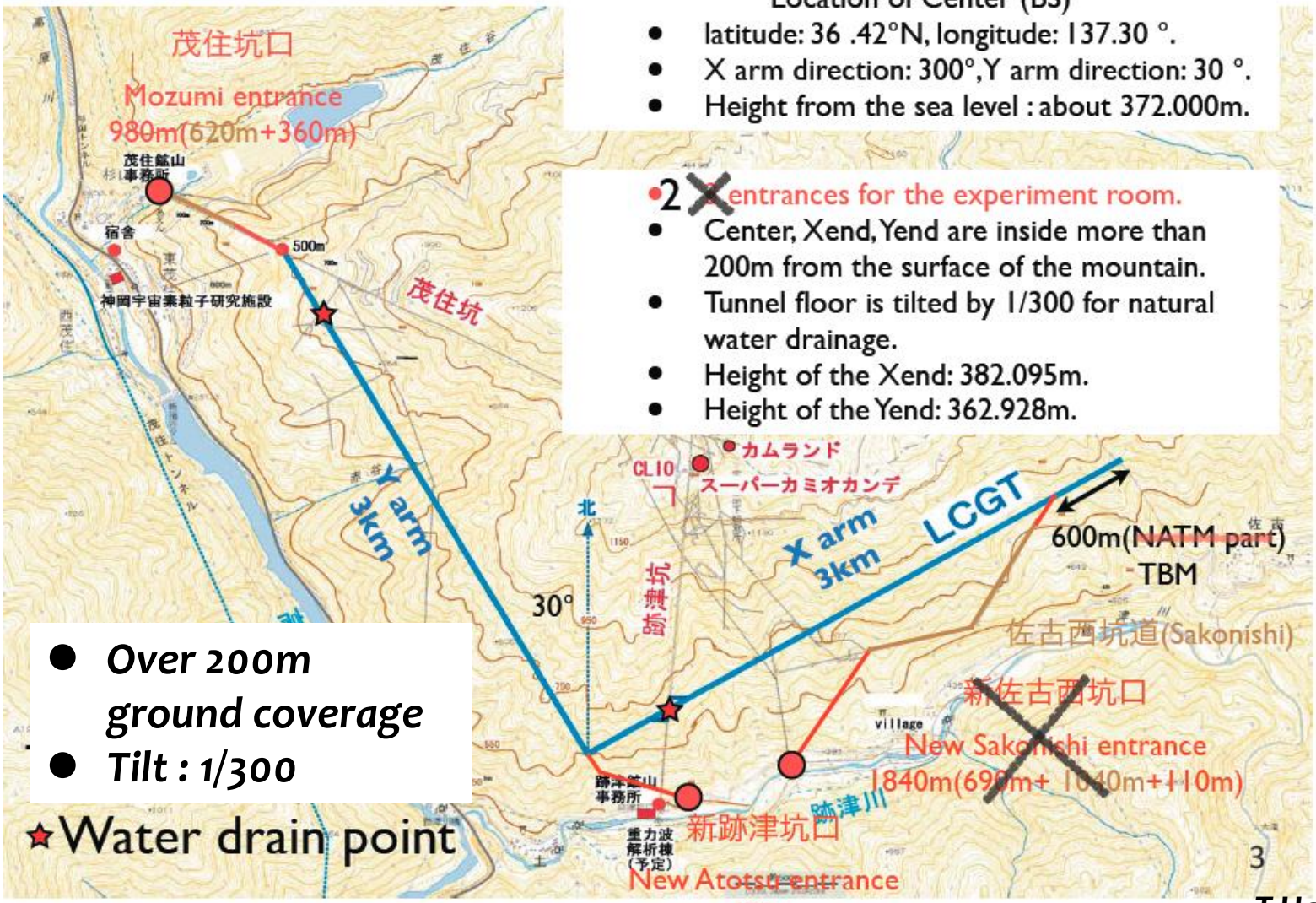

- *Over 200m ground coverage*
- *Tilt : 1/300*

★Water drain point

T.Uchiyama

Tunnel Design

The latest map of LCGT

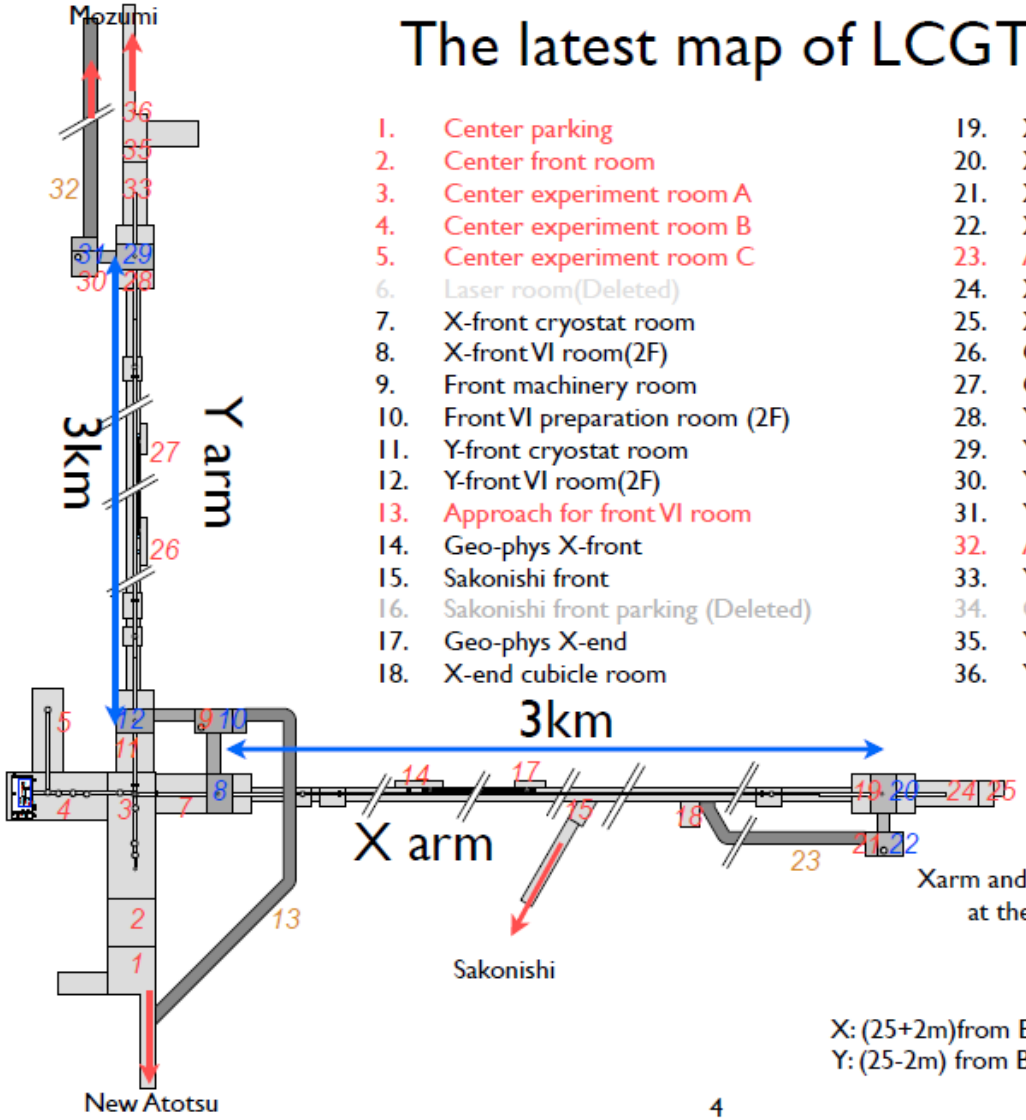

1. Center parking
2. Center front room
3. Center experiment room A
4. Center experiment room B
5. Center experiment room C
6. Laser room(Deleted)
7. X-front cryostat room
8. X-front VI room(2F)
9. Front machinery room
10. Front VI preparation room (2F)
11. Y-front cryostat room
12. Y-front VI room(2F)
13. Approach for front VI room
14. Geo-phys X-front
15. Sakonishi front
16. Sakonishi front parking (Deleted)
17. Geo-phys X-end
18. X-end cubicle room
19. X-end cryostat room
20. X-end VI room(2F)
21. X-end machinery room
22. X-end VI preparation room (2F)
23. Approach for X-end VI room
24. X-end experiment room
25. X-end staff room
26. Geo-phys Y-front
27. Geo-phys Y-end
28. Y-end cryostat room
29. Y-end VI room(2F)
30. Y-end machinery room
31. Y-end VI preparation room (2F)
32. Approach for Y-end VI room
33. Y-end experiment room
34. Cryogenic experiment room (Deleted)
35. Y-end staff room
36. Y-end parking

Xarm and Yarm cross perpendicularly at the center of BS chamber.

3km:

X: (25+2m)from BS - Center of X end cryostat room
Y: (25-2m) from BS - Center of Y end cryostat room

Typical Tunnel Cross section

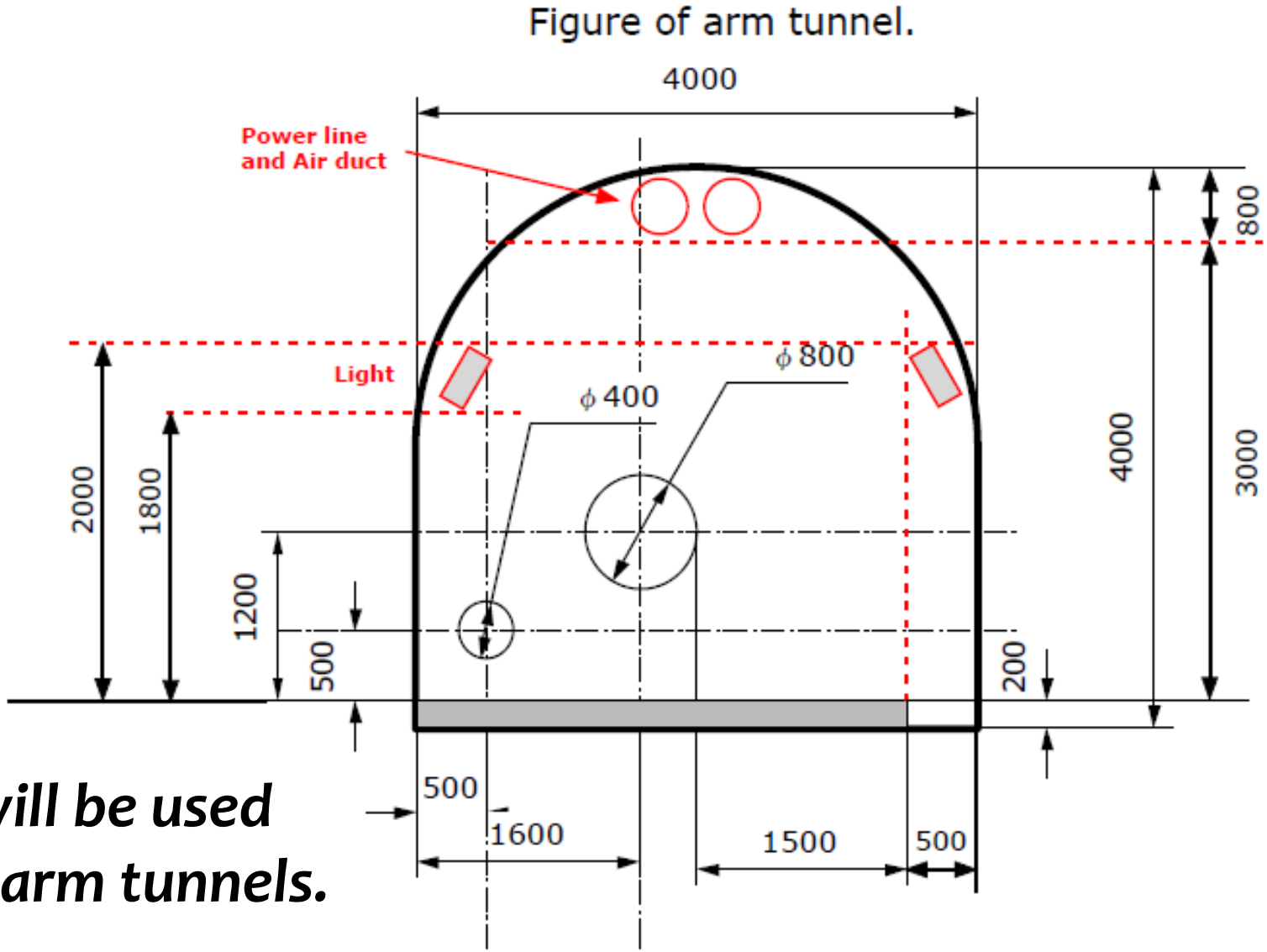

- ***TBM will be used for all arm tunnels.***

Center Room Design

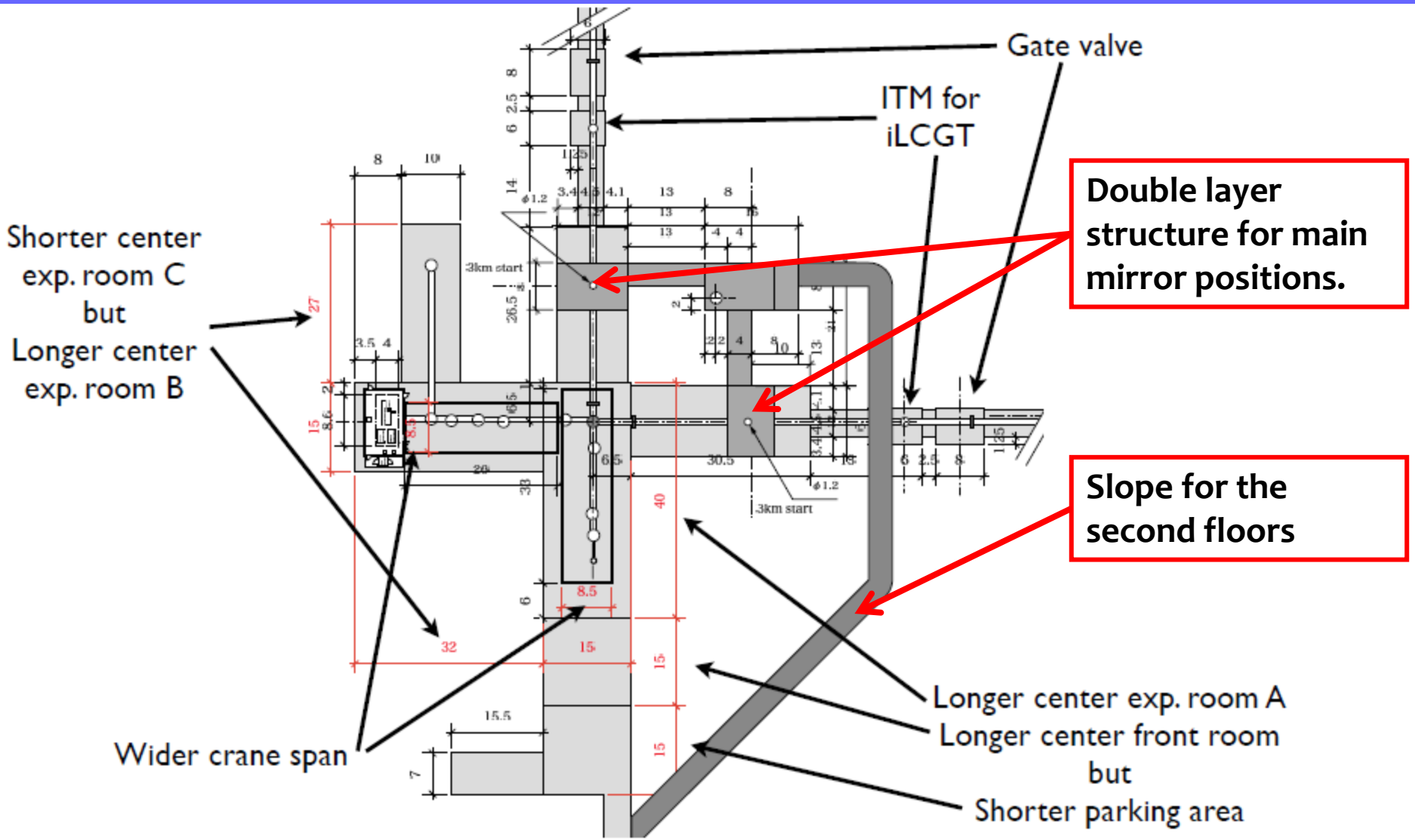

Double Layer Structure

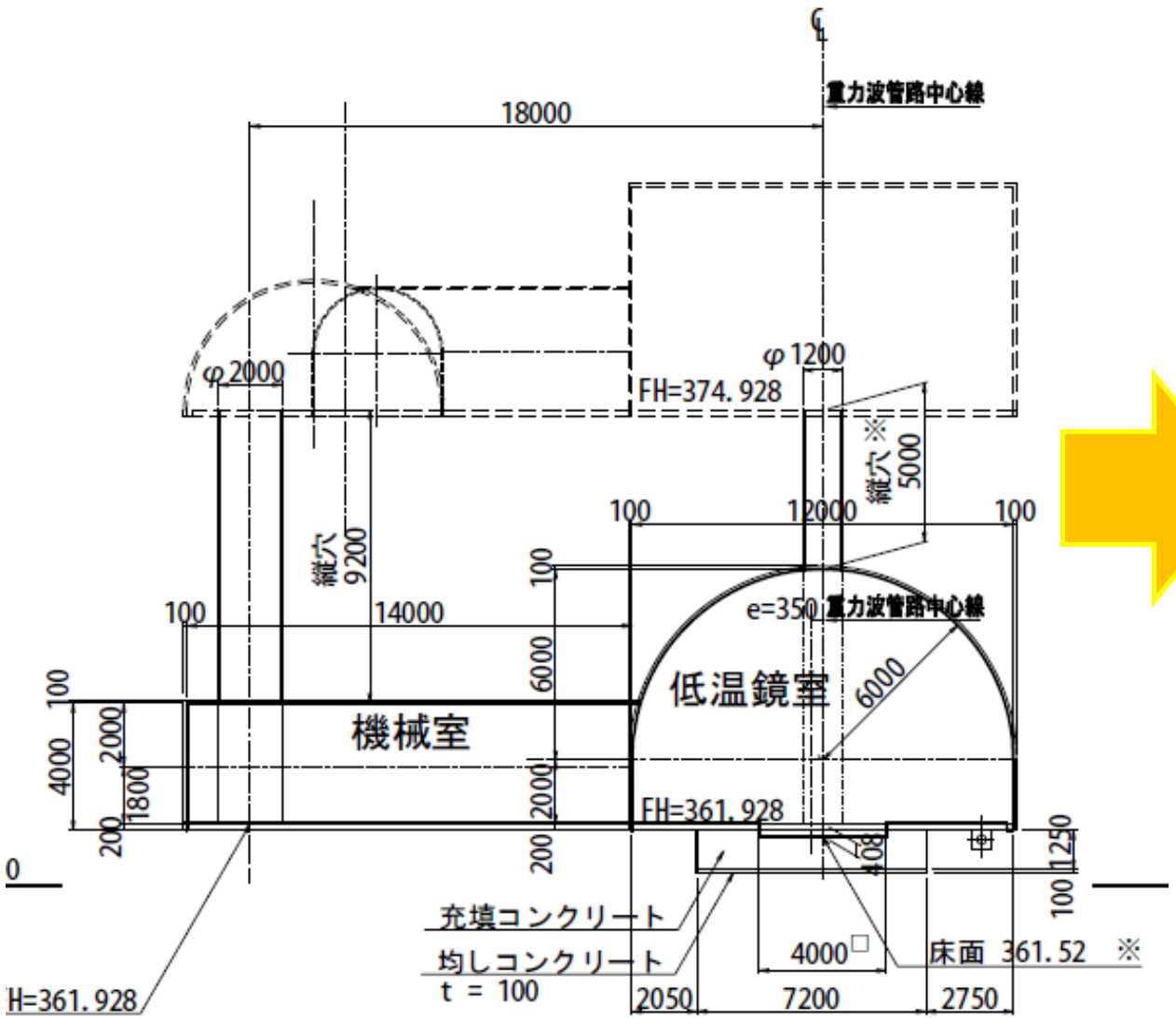

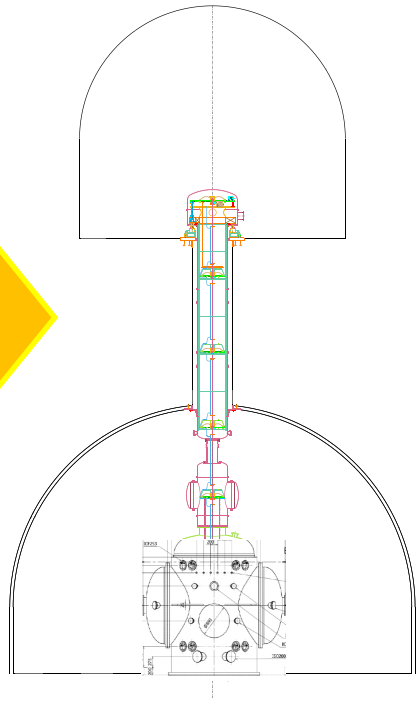

Optical Layout for i.b.LCGT

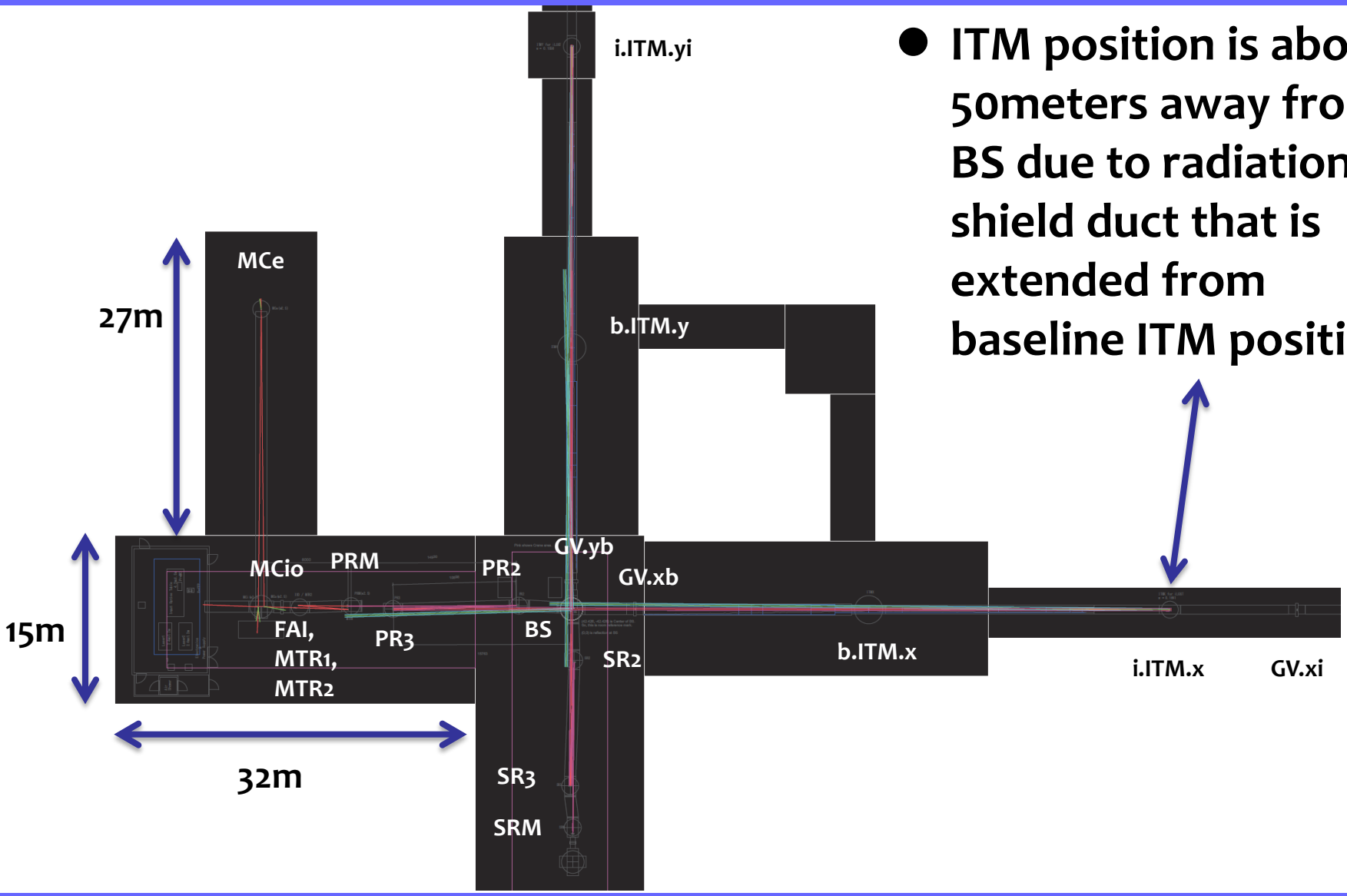

- ITM position is about 50meters away from BS due to radiation shield duct that is extended from baseline ITM position.

Vacuum System

- A unit tube (12 m long and 0.8 m in diameter, SUS) production of the first lot (120 of 500) was started in this July.

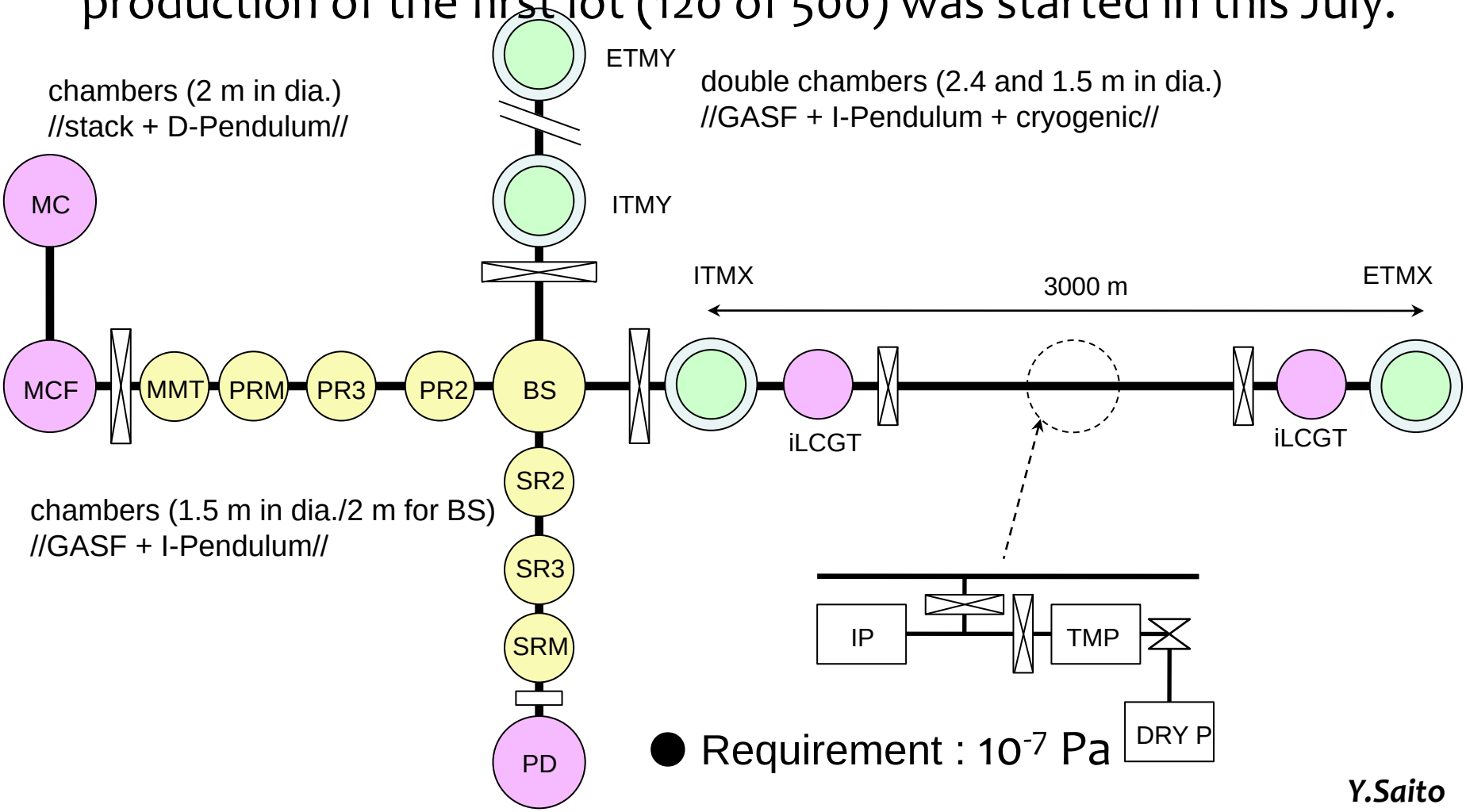

- Requirement : 10^{-7} Pa

Y.Saito

Vacuum Requirement

- Manufacturing of 12-m long tube -

* electro polishing and rinsing

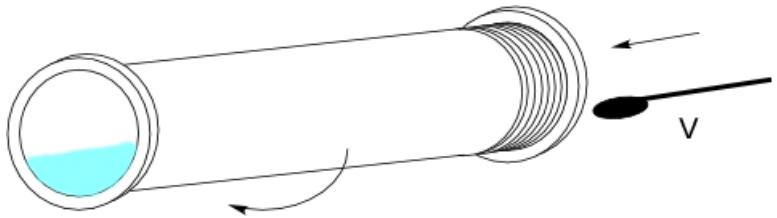

Electro polishing

- **current density; 20 A/dm2**
- **removal; 30-40 mm**
- **Ry ~ 2.5 mm**

Rinsing

- **pure water; 15 MW**

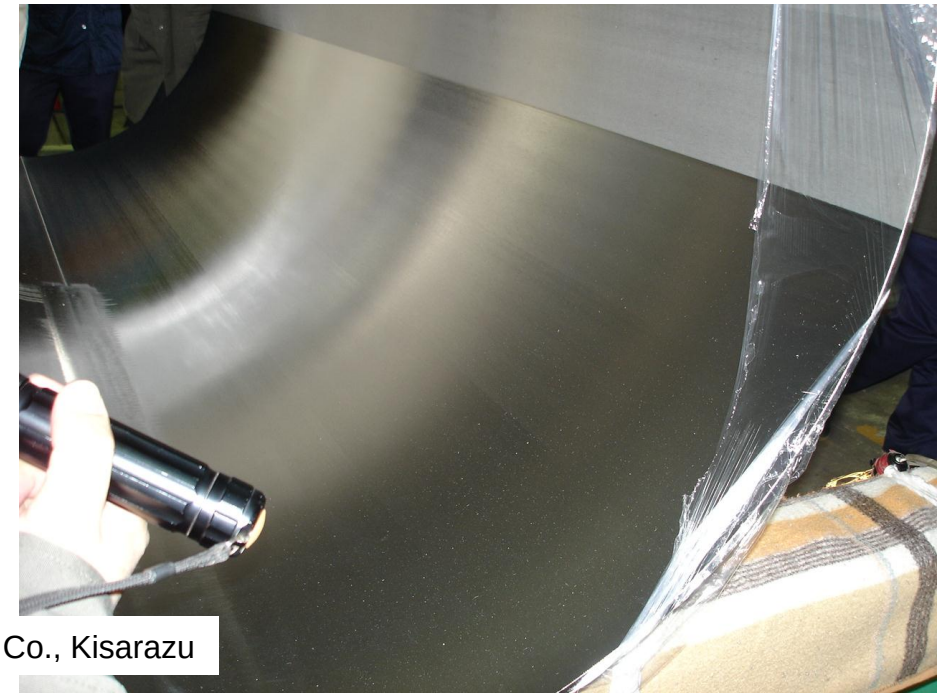

San-ai Plant Co., Kisarazu

A test product of 4-m long tube; a half of the inner surface was electro polished.

Vacuum Requirement

- Manufacturing of 12-m long tube -

* pre-baking → dry air venting → seal

Furnace
（200℃, ～3days）

Vacuum Tube Production

- Stock of 12-m long tubes -

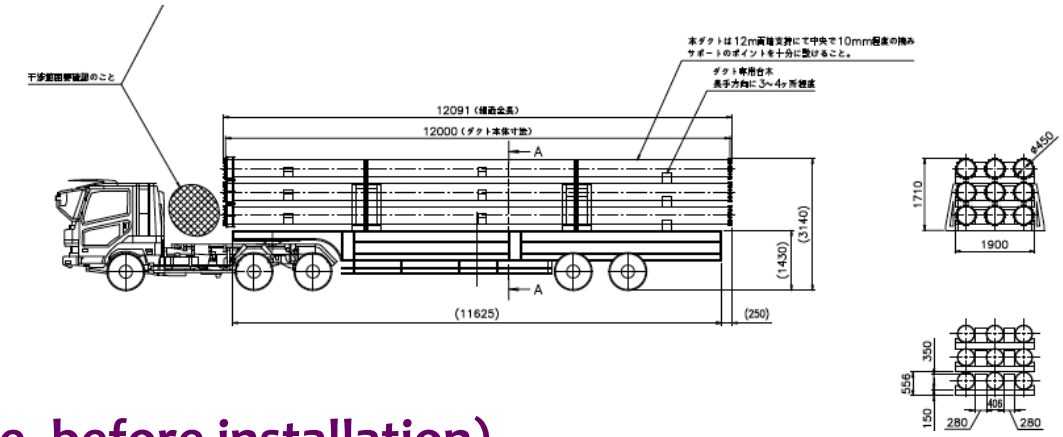

- storage

(one year, or more, before installation)

→ in the railway tunnel

Mozumi tunnel of Kamioka Mining Railway (not in service)

LCGT Main IFO

- Laser Power and wavelength

200W, 1064nm (→ 1550 nm ??)

- Mirrors

Sapphire/Silicon(20K)

- Finesse and Power in Cavity

1550, 400kW

- One suspended Mode Cleaner (13~26 m)

Rigid Pre-MCs will also be introduced.

- Folding structure

For Power and Signal Recycling Cavities

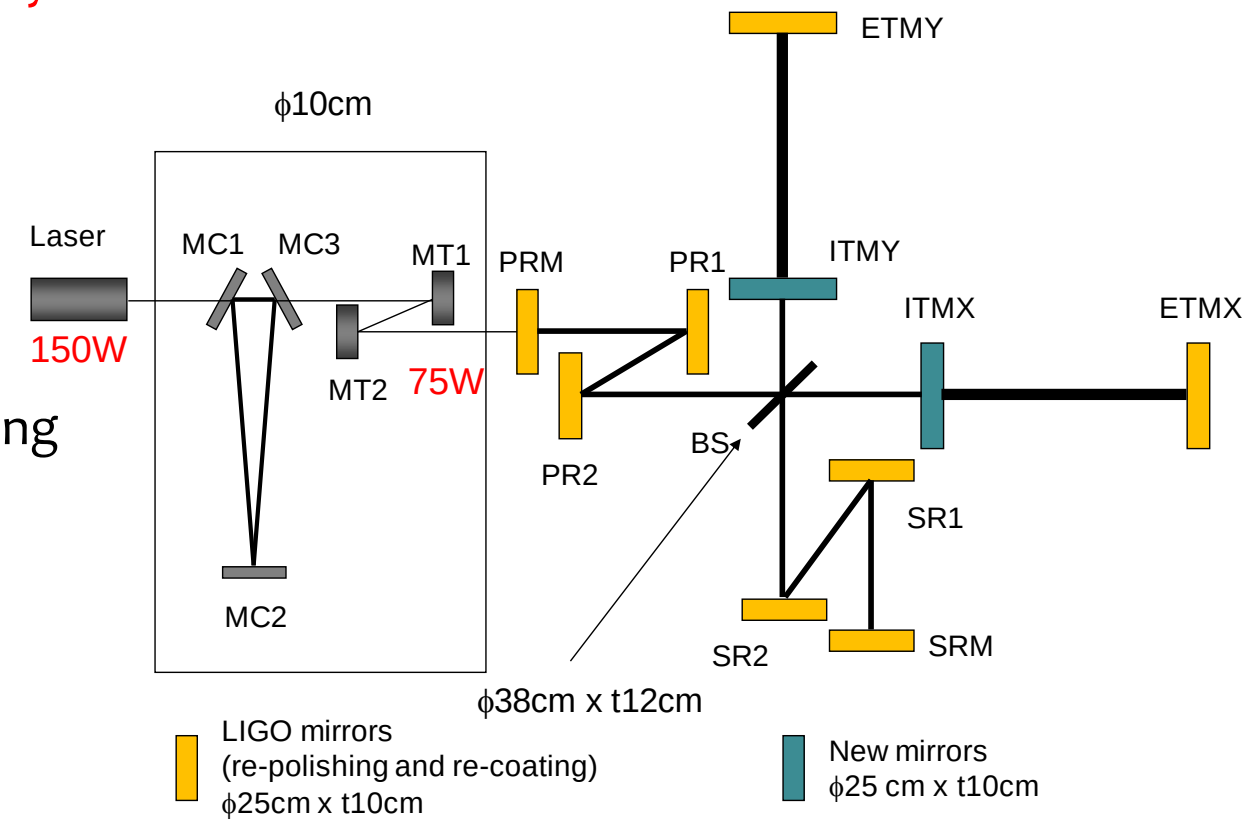

IFO Control Parameters

- f1 sideband resonates in PRC-SRC
- f2 sideband resonates only in PRC
- f3 sideband does not enter the interferometer at all

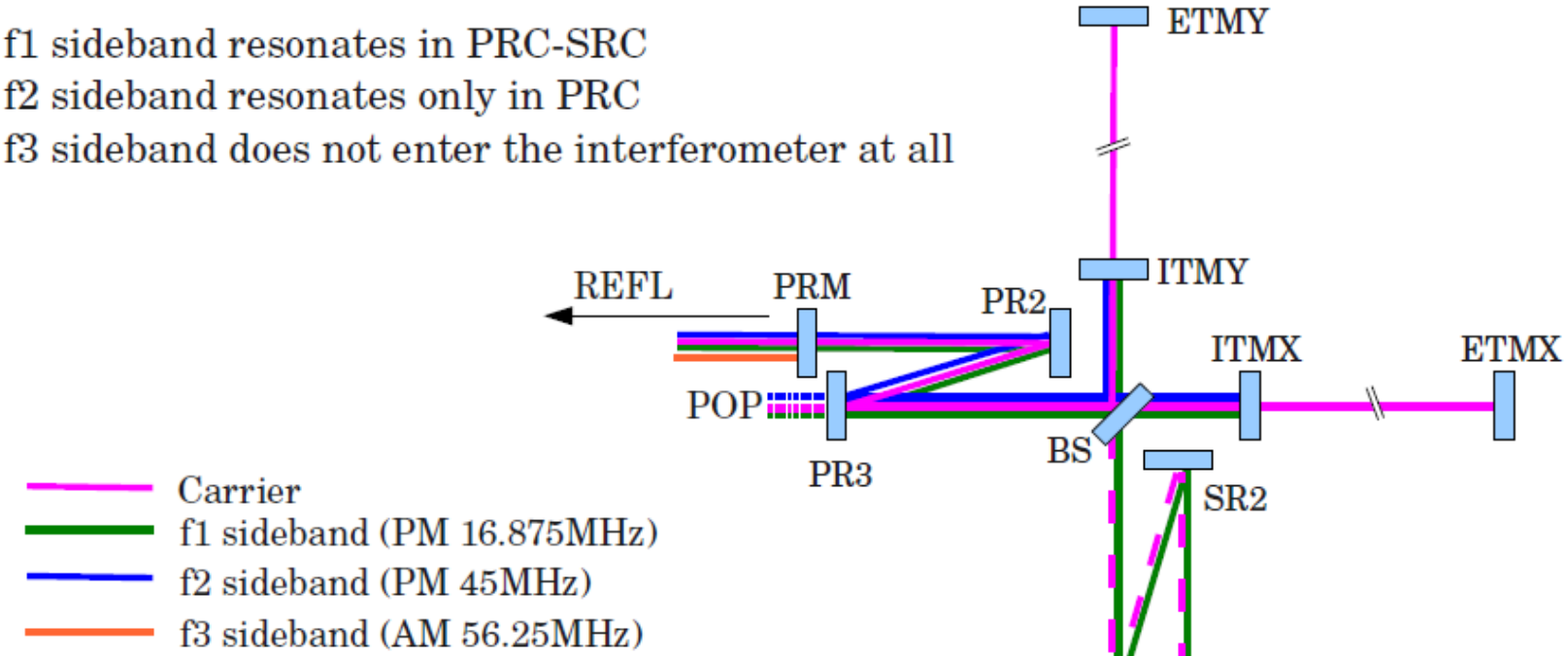

- **Length signal obtain position, phase, noise estimation are finished.**
- **ASC signal shows some problems to deteriorate sensitivity due to suspension pitch resonances. (to do item)**

Y.Aso

Optimal Configurations

ITM Spot: 3.5cm, ETM Spot: 4.0cm (IR=245Mpc)

(b) Positive (14km - 7.5km) Displacement of mirrors: PRM/SRM: 3.7cm, PR2/SR2: 1.8cm PRC-Arm Mode Matching: 99.99% Input beam - PRC Mode Matching: 99.97% One-way Gouy phase: 21deg Unstable Kopt: 24.4 N·m/rad	(b) Negative (1.68km - 1.87km) Displacement of mirrors: PRM/SRM: 34cm, PR2/SR2: 17cm PRC-Arm Mode Matching: 99.99% Input beam - PRC Mode Matching: 99.8% One-way Gouy phase: 22deg Unstable Kopt: 4.5 N·m/rad

ITM Spot: 4.0cm, ETM Spot: 4.0cm (IR=248Mpc)

(c) Positive (13.2km - 13.2km) Displacement of mirrors: PRM/SRM: 1.5cm, PR3/SR3: 2.2cm PRC-Arm Mode Matching: 99.99% Input beam - PRC Mode Matching: 95% One-way Gouy phase: 30deg Unstable Kopt: 33.4 N·m/rad	(c) Negative (1.69km - 1.69km) Displacement of mirrors: PRM/SRM: 26cm, PR2/SR2: 13cm PRC-Arm Mode Matching: 99.99% Input beam - PRC Mode Matching: 92% One-way Gouy phase: 34deg Unstable Kopt: 4.3 N·m/rad

Requirements for Folding Cavity

- to obtain separated alignment sensing signal for ITM and PRM -

For bLCGT configuration (1.6-1.9km arm cavity)

● Mode miss match of PRC by ROC error

- ROC error (1%) of PR2 reduce the mode match down to 98%
- ROC error (1%) of PR3 reduce the mode match down to 88%.

⇒ ROC error of PR3 is serious

● Recovery of mode match by changing position of mirrors

- It is possible to recover the mode match up to almost 100% by changing length of mirrors by ±14 cm for the ROC error (1%) of PR3.

⇒ PRM position need to move over 28 cm. It is possible.

⇒ Gouy phase aberration is ±0.3°

- Error of correction length need to suppress within ±1 cm to recover the mode match up to 99%.

● Degeneracy with higher order modes

- PRC does not degenerate with HOMs in order of (n+m)<10.
- Requirement for the folding angle is less than 1 degree.

Michimura
Agatsuma

The similar result was obtained for iLCGT configuration (Flat-7km arm cavity)

200W Laser

- Most of the main elements will be obtained by march 2012.
- The first laser will be hopefully completed before march 2013.
- Green lasers for green locking will be prepared by march 2012. They will be INNOLIGHT PROMETHEUS.

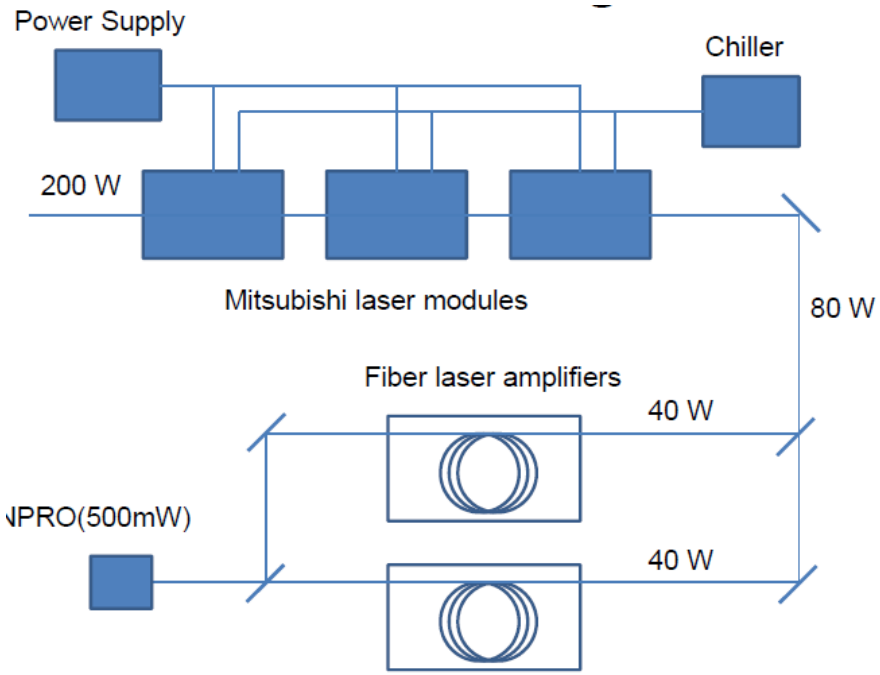

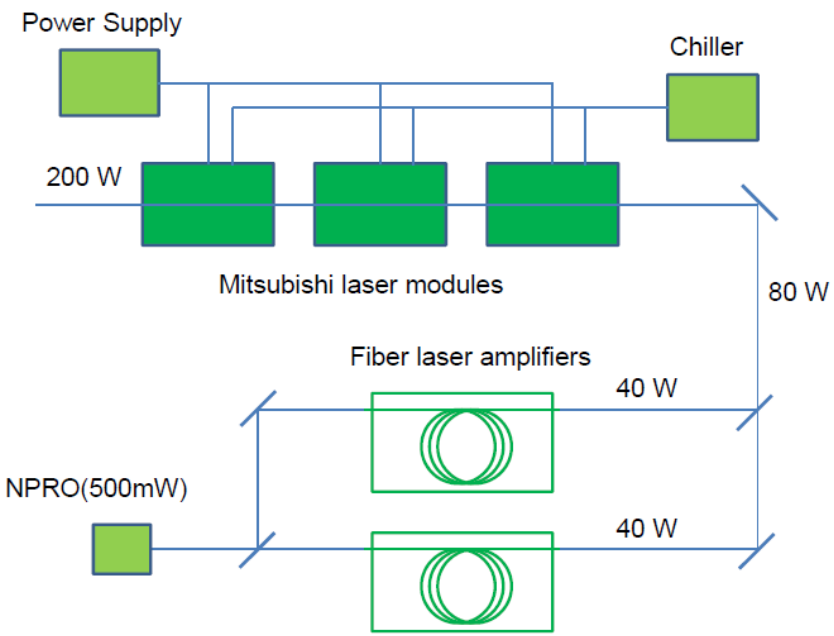

Light Green: Obtained Green: Ordered

N.Mio

Items to be tested for Laser

- Performance of the fiber amplifier
  - 10-W one is OK but 40-W one has not been tested.
- Performance of the coherent addition system
  - The fringe contrast, phase stability and so on.
- Performance of the laser module when used as an amplifier.
  - Optimization of the beam profile for obtaining the best amplification performance.
  - Polarization stability, noise level should be tested.
- Fix the specifications for the control system (interfaces to a PC and other systems)
  - Discussion about the assembling with a company is necessary.

Mirrors for i.LCGT

- SiO2 -

- i.LCGT
  - SiO2 Mirrors (substrate : ϕ250 x t100, 10kg) for PRs for folding in PRC, SRs in SRC and ETMs.
  - Coating will be done in Japan.
  - Polishing might be by a company or RIKEN Group in Japan.

On the other hand.

- BS (ϕ380 x t120 -> t80??),
- ITMs
- MC(ϕ100 x t30, flat & R=40m w2.5deg)

are newly produced by "Asahi Glass" AQ2 Quality in Japan.

- Polishing and Coating might be by CSIRO …

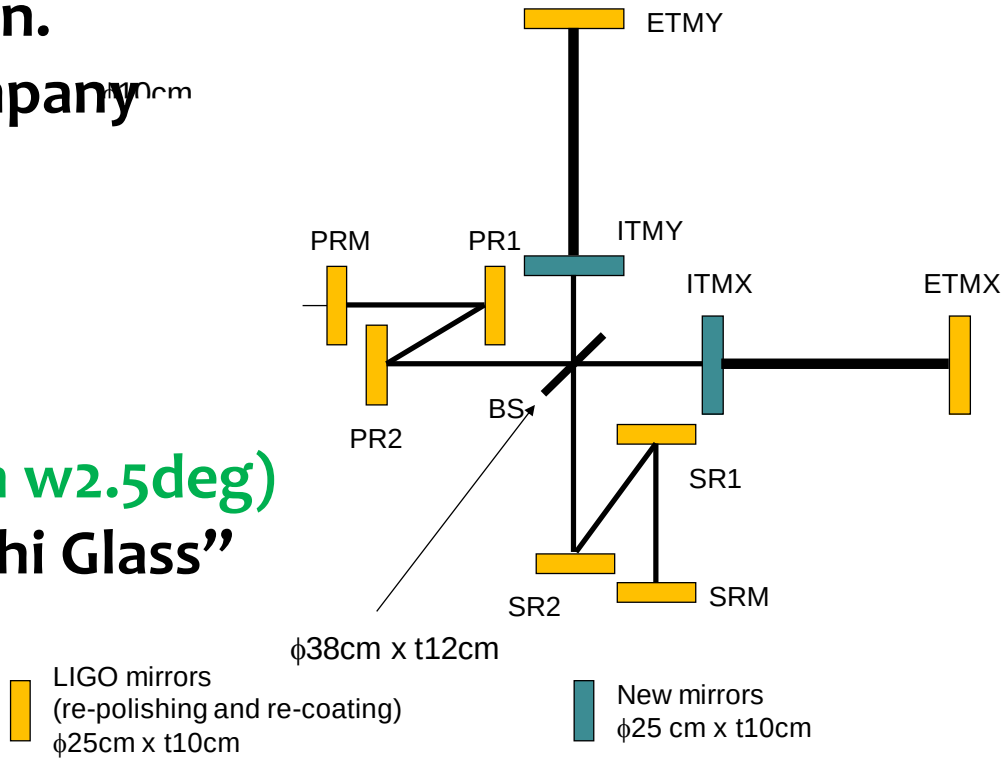

Mirrors for b.LCGT

- Al2O3 -

- b.LCGT (= LCGT)
  - A-axis crystal (ϕ25cm x t15cm) has been ordered.
  - Max size of C-axis crystal is now ϕ22cm x t15cm; this size is limited by the height of the boules.
  - Absorption is still unclear; new small samples are being AR-coated. We need further days for obtaining the information (improved or not).

Vibration Isolation System

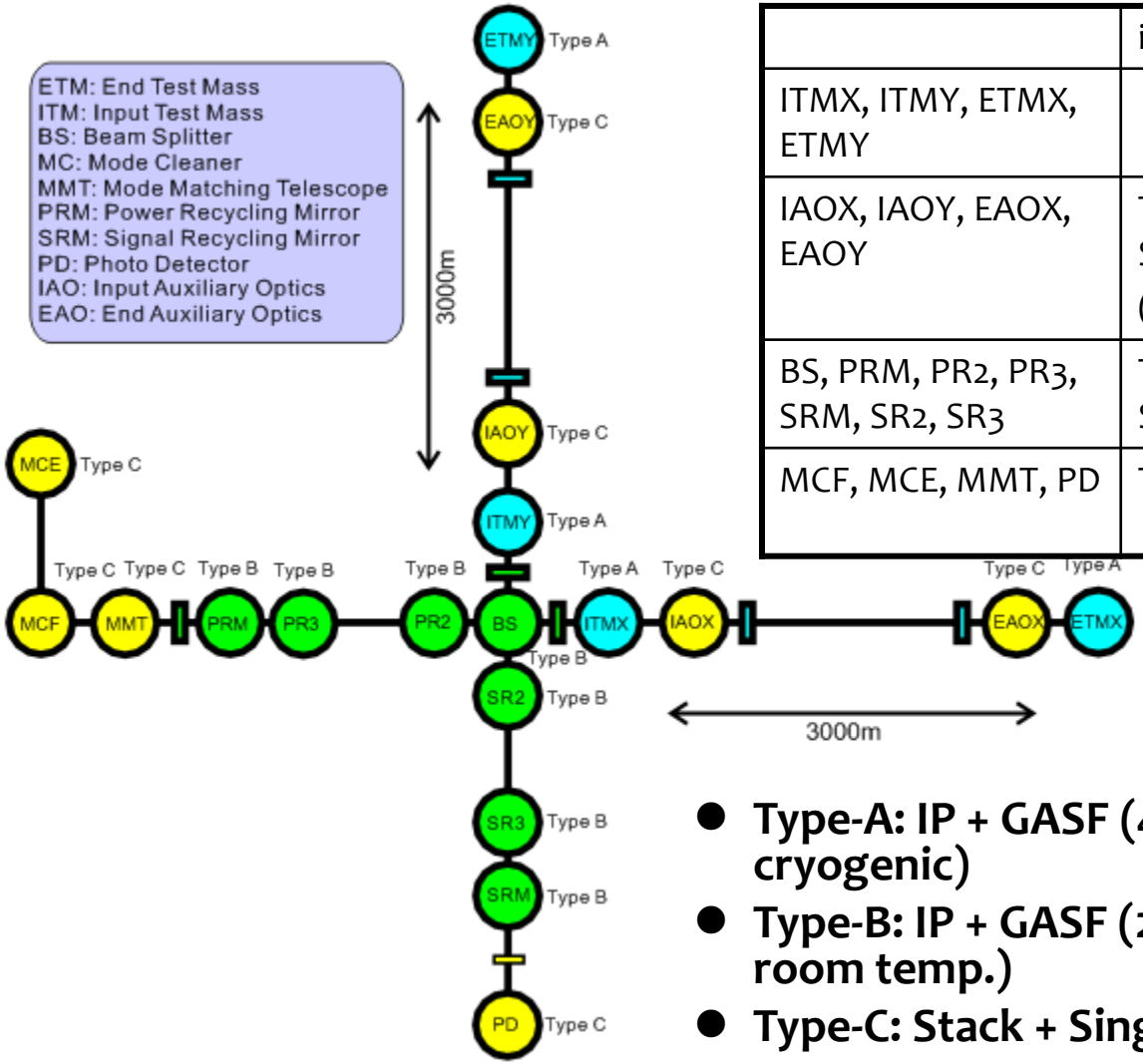

	iLCGT	bLCGT
ITMX, ITMY, ETMX, ETMY		Type-A
IAOX, IAOY, EAOX, EAOY	Type-B Payload on Stack (for ITM/ETM)	Type-C (for AO)
BS, PRM, PR2, PR3, SRM, SR2, SR3	Type-B Payload on Stack	Type-B
MCF, MCE, MMT, PD	Type-C	Type-C

- **Type-A: IP + GASF (4 stage) + Payload (23kg, cryogenic)**
- **Type-B: IP + GASF (2 stage) + Payload (10kg/20kg, room temp.)**
- **Type-C: Stack + Single/Double-pendulum (~1kg)**

Pendulums (Type-A)

R.Takahashi

- Type-A (2-layer structure)
  - Upper tunnel containing pre-isolator (short IP and top filter)
  - 1.2m diameter 5m tall borehole containing standard filter chain
  - Lower tunnel containing cryostat and payload

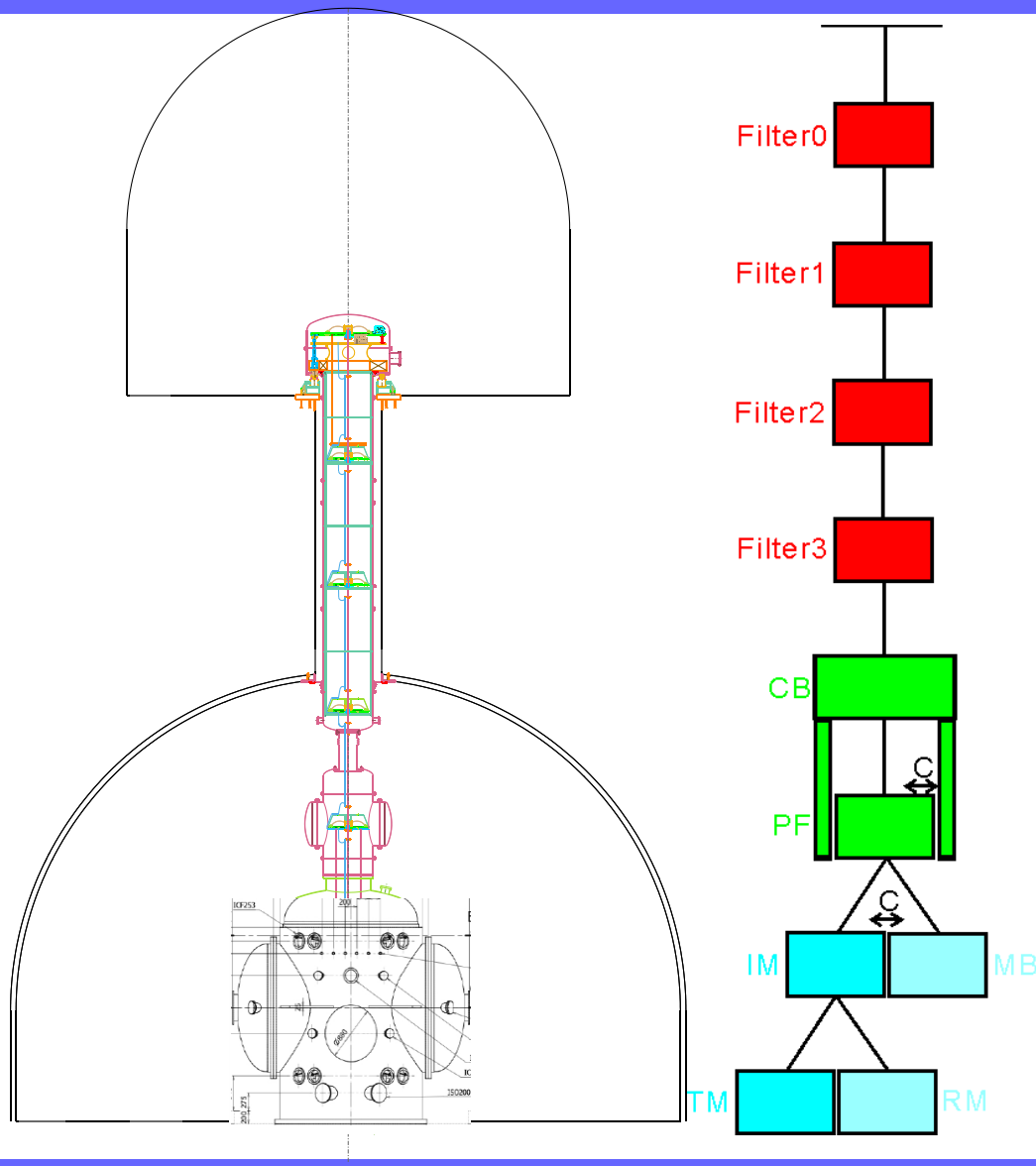

Pendulums (Type-B)

- **Type-B**
  - IP base is supported by the outer frame.
  - Stack is used for small optics.
  - Pre-isolator is the same as Type-A's.

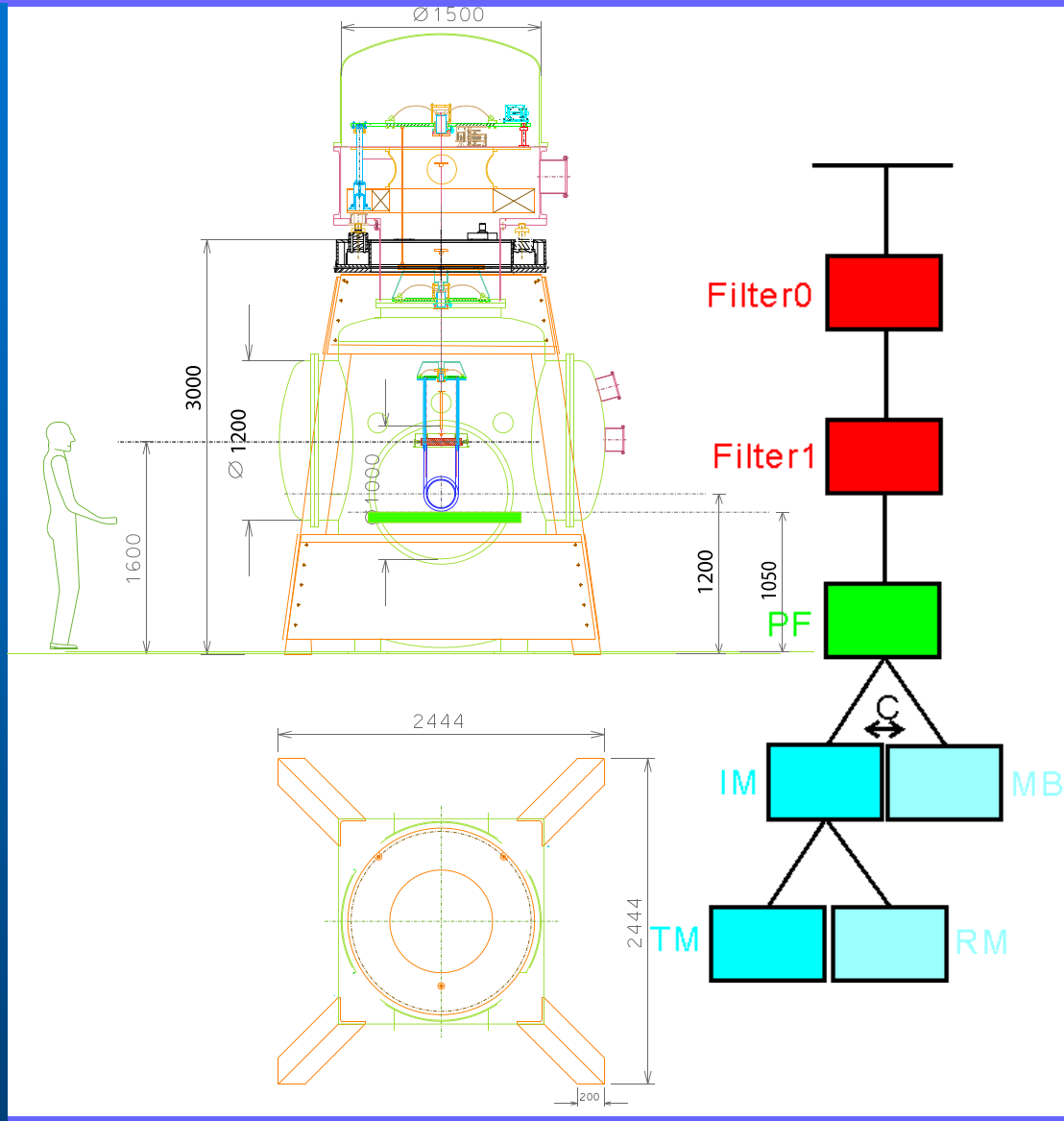

Pendulums (Type-C)

- Type-C
  - Stack is designed based on TAMA's one.
  - Rubber for stack is enclosed by bellows.
  - Differential evacuation is necessary for the bellows.

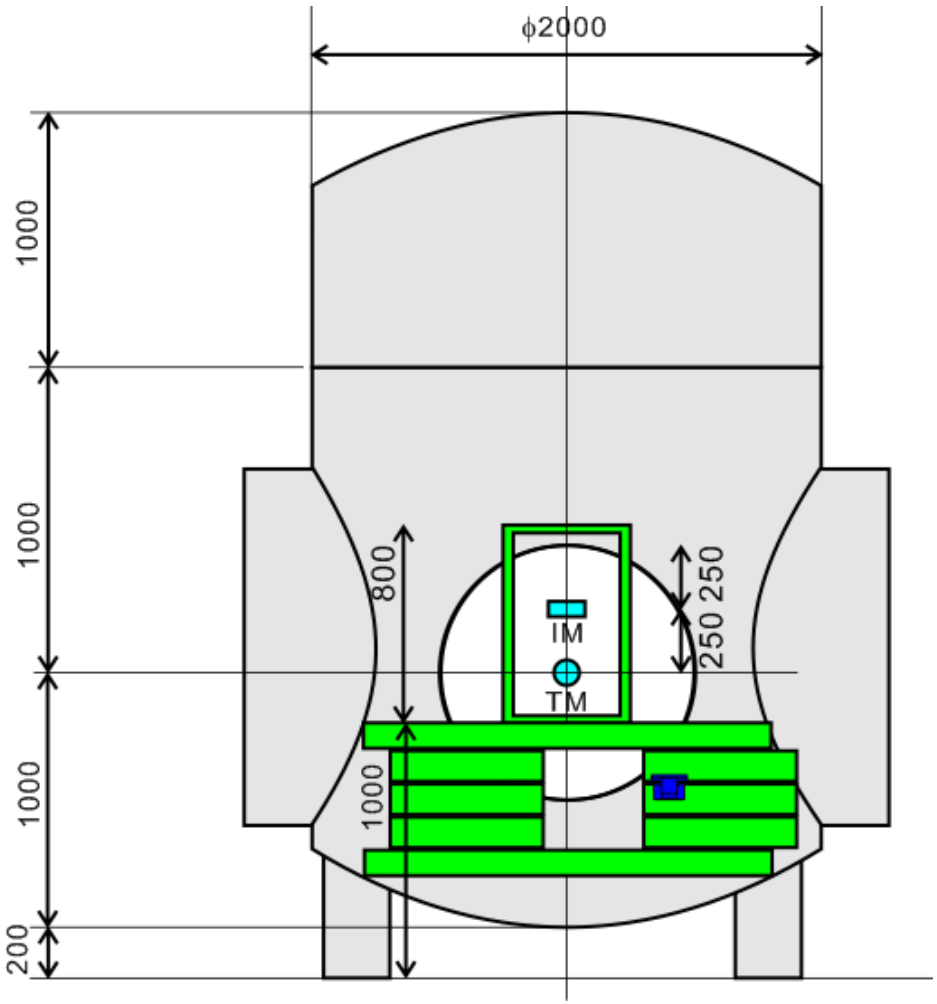

Isolation Performance (TypeA)

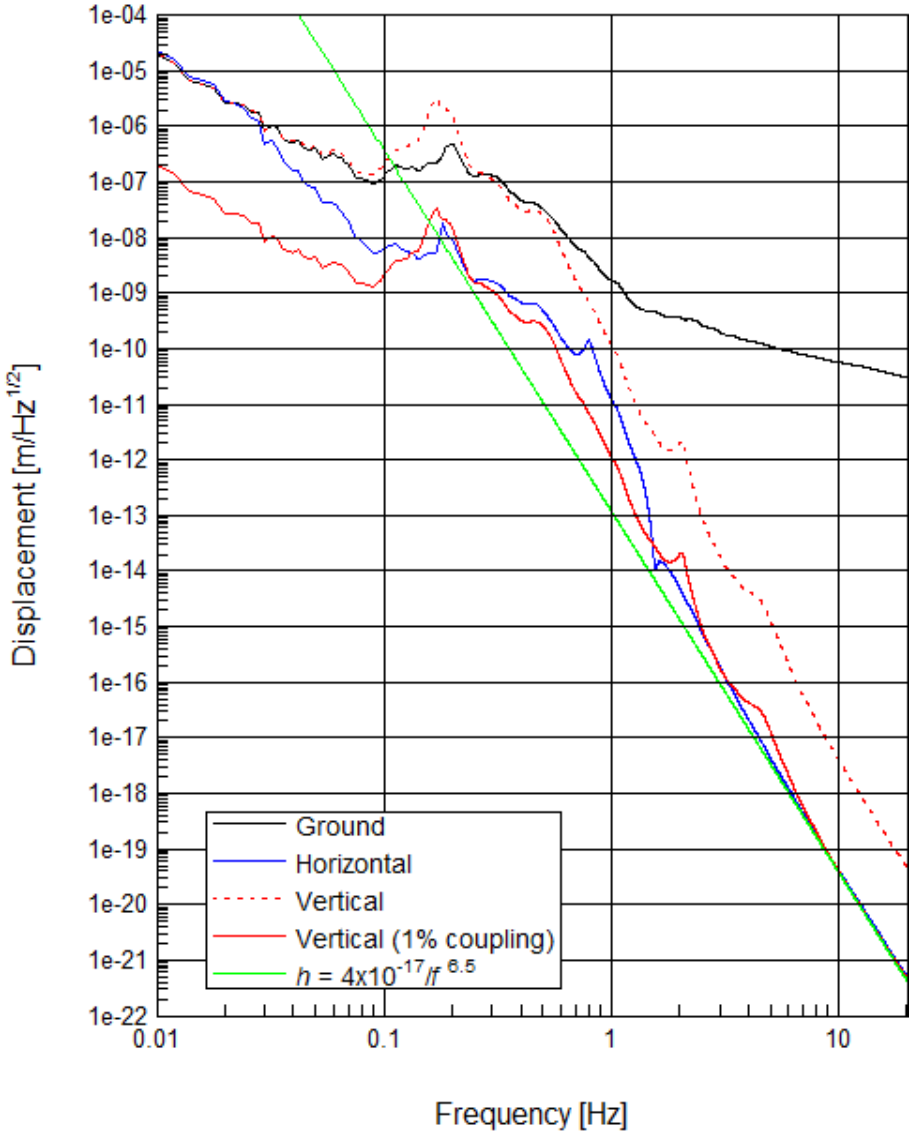

- The isolation above 3Hz is due to a heat link of 0.03Hz.
- The 1% coupling from vertical displacement is comparable with the horizontal one.
- Predicted displacements are consistent with the IFO requirement above 5Hz.

Construction Status

- standard filter and top filter -

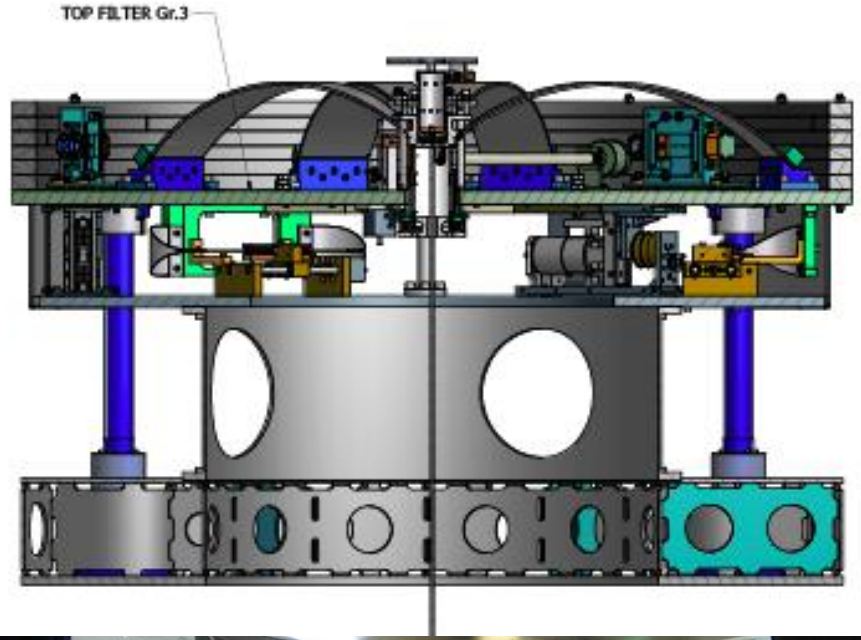

Isolation Performance (TypeB)

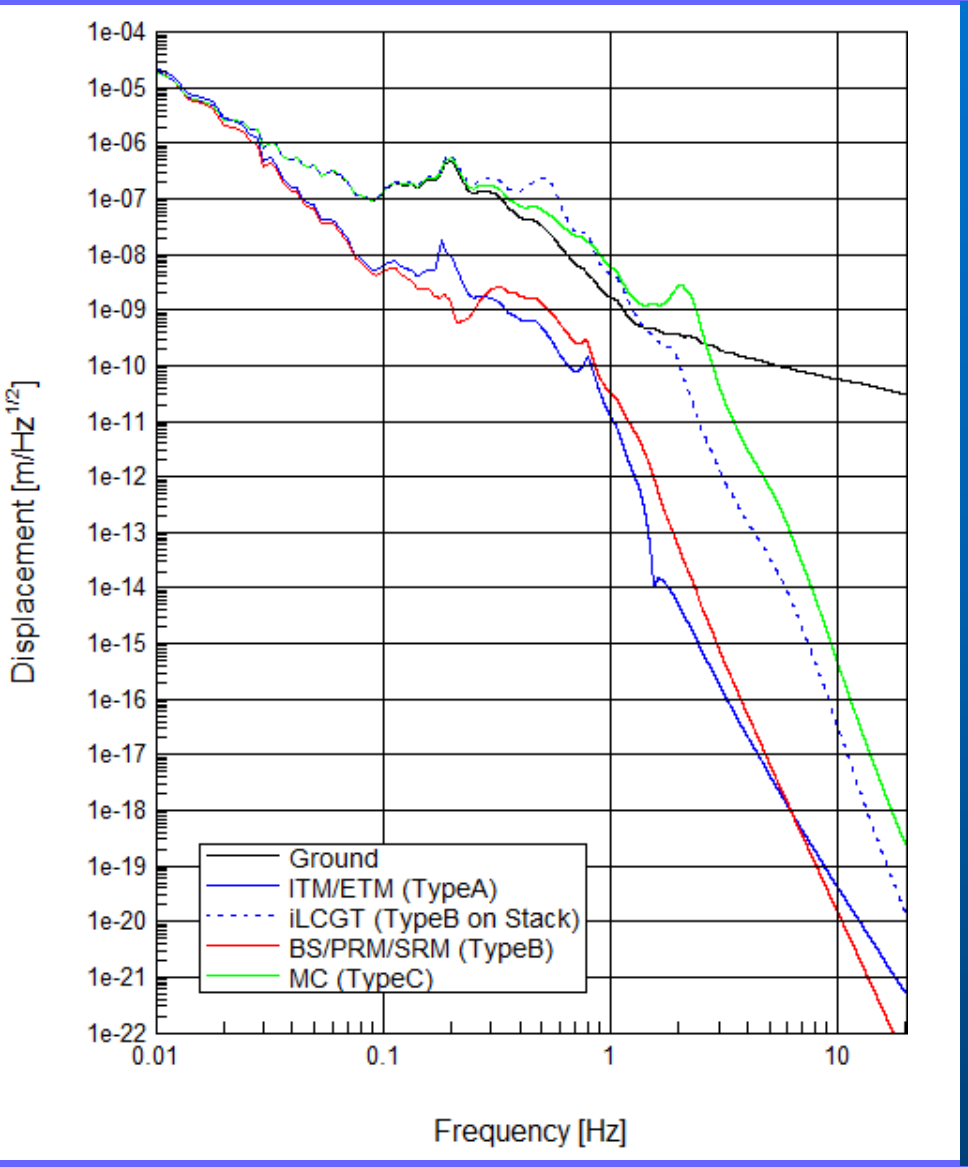

- Calculation for the Type-B system does not contain the effects due to the support structure for the IP.
- Almost main optics are suspended by the Type-B payload on the stack in iLCGT.

Expected Residual RMS

	i.LCGT		b.LCGT	
	Target	Calculation	Requirement	Calculation
Displacement @10Hz [m/rHz]	→	3×10^{-17}	4×10^{-20}	4×10^{-20}
RMS (velocity) [μm/s]	→	3.1	0.1	0.08
RMS (displace.) [μm]	→	2.2	0.1	0.05

Rigid-Body Models of SAS

- Seismic noise induced motion of TM, with/without eddy current damping

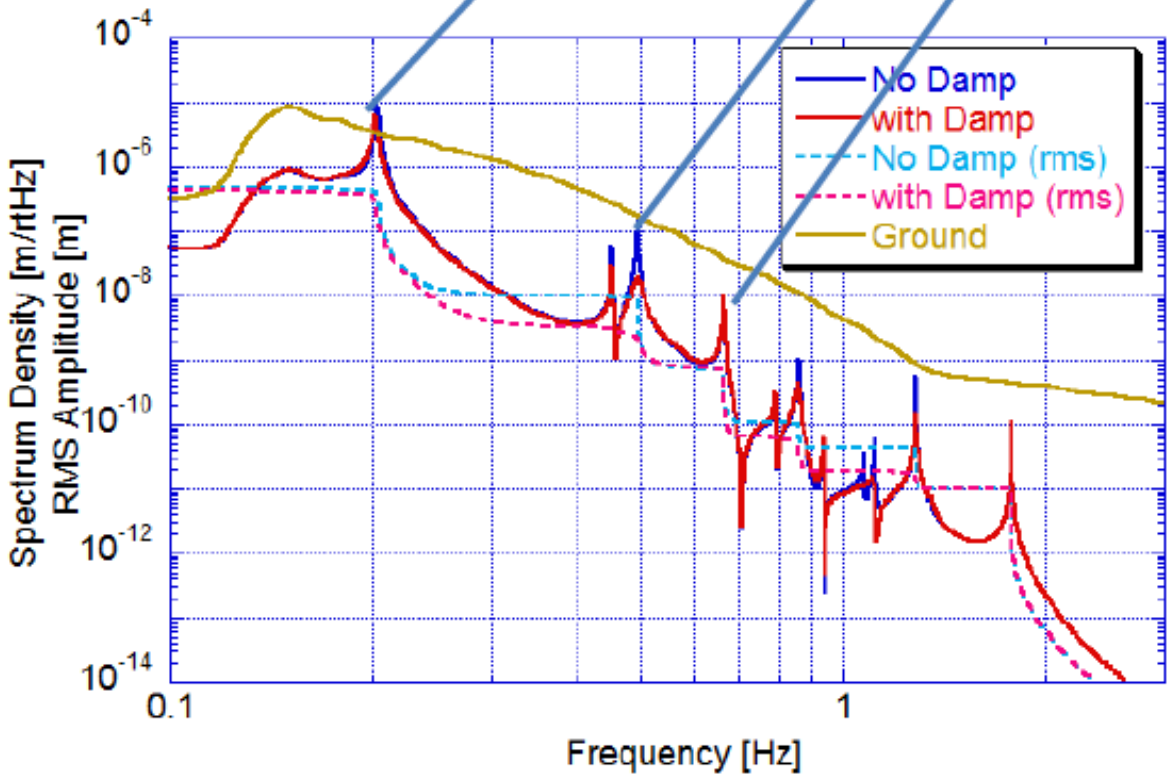

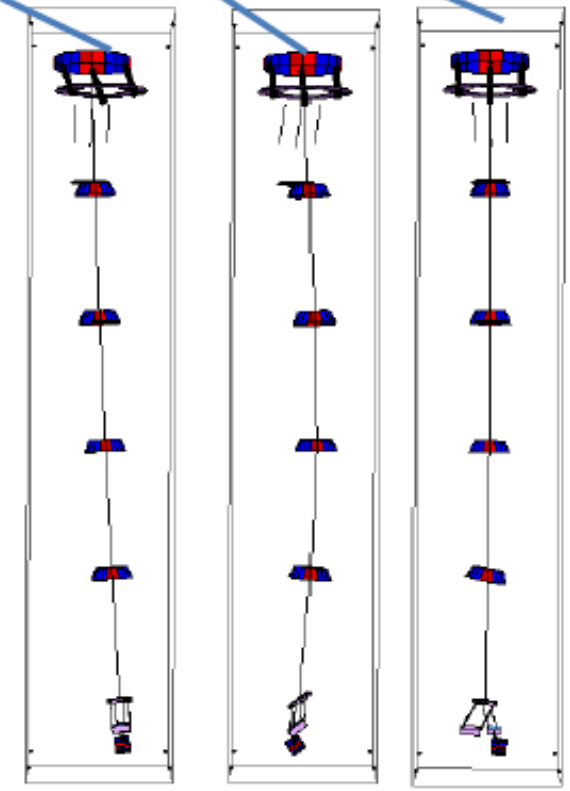

Sekiguchi

Cryostats

- Low vibration 4K cryocooler unit (prototype)
  - Manufactured one unit
  - Performance test in progress at KEK, detail will be presented by N.Kimura.
- Low vibration 4K cryocooler unit (actual)
  - Manufacture 7 units in 2011fy.
  - Cost may be 33% larger than the initial estimation.
  - Bidding on 9/5, opening on 9/20
  - Candidate companies : 4 ?
- Cryostat /Mirror chamber
  - Machine 4 sets of components and partially assembling.
  - Cost may reduce 46% from the initial estimation by restriction of manufacturing period.
  - Bidding on 9/5, opening on 9/21
  - Candidate companies : 3 ?
- Other expenses
  - Purchase instruments for measurement, trial manufacture, preparation of samples, machining jigs, etc

Kimura

Required Issues for Cryostats Conceptual Design

- Temperature of the test mass/mirror < 20 K.
- Inner radiation shield have to be cooled < 8 K.
- The mirror have to be cooled without introducing excess noise, especially vibration from the cryo-coolers.
- Accessibility and enough volume for the installation work around the mirror.
- Satisfy ultra high vacuum specification < 10^{-7} Pa.

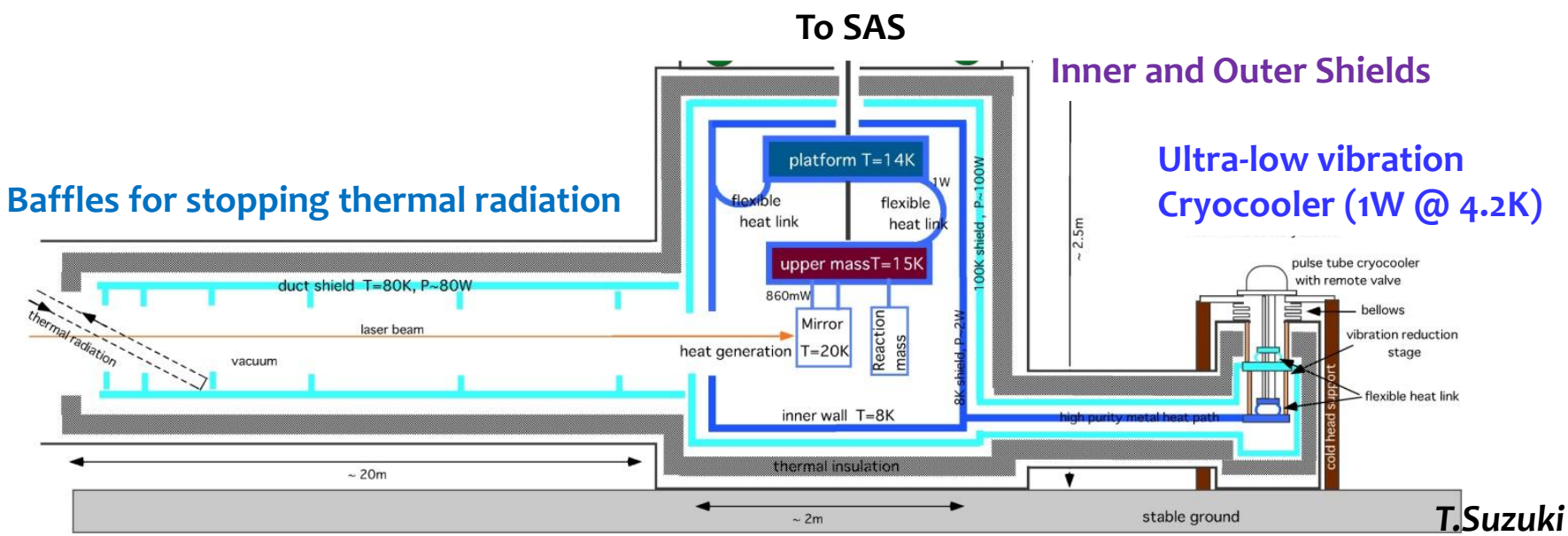

T.Suzuki

Cryostats

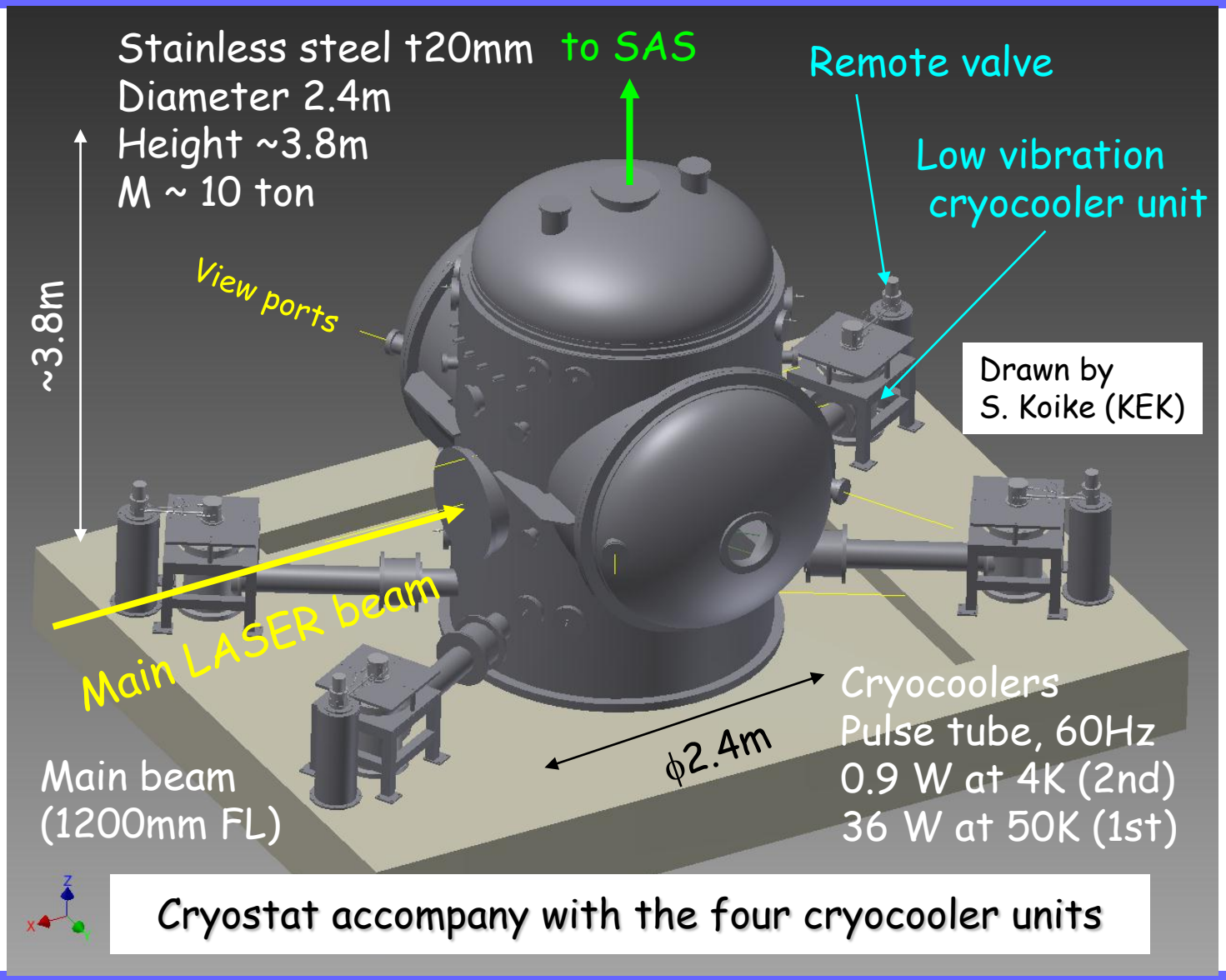

Cryostat accompany with the four cryocooler units

Inner Structure of Cryostats

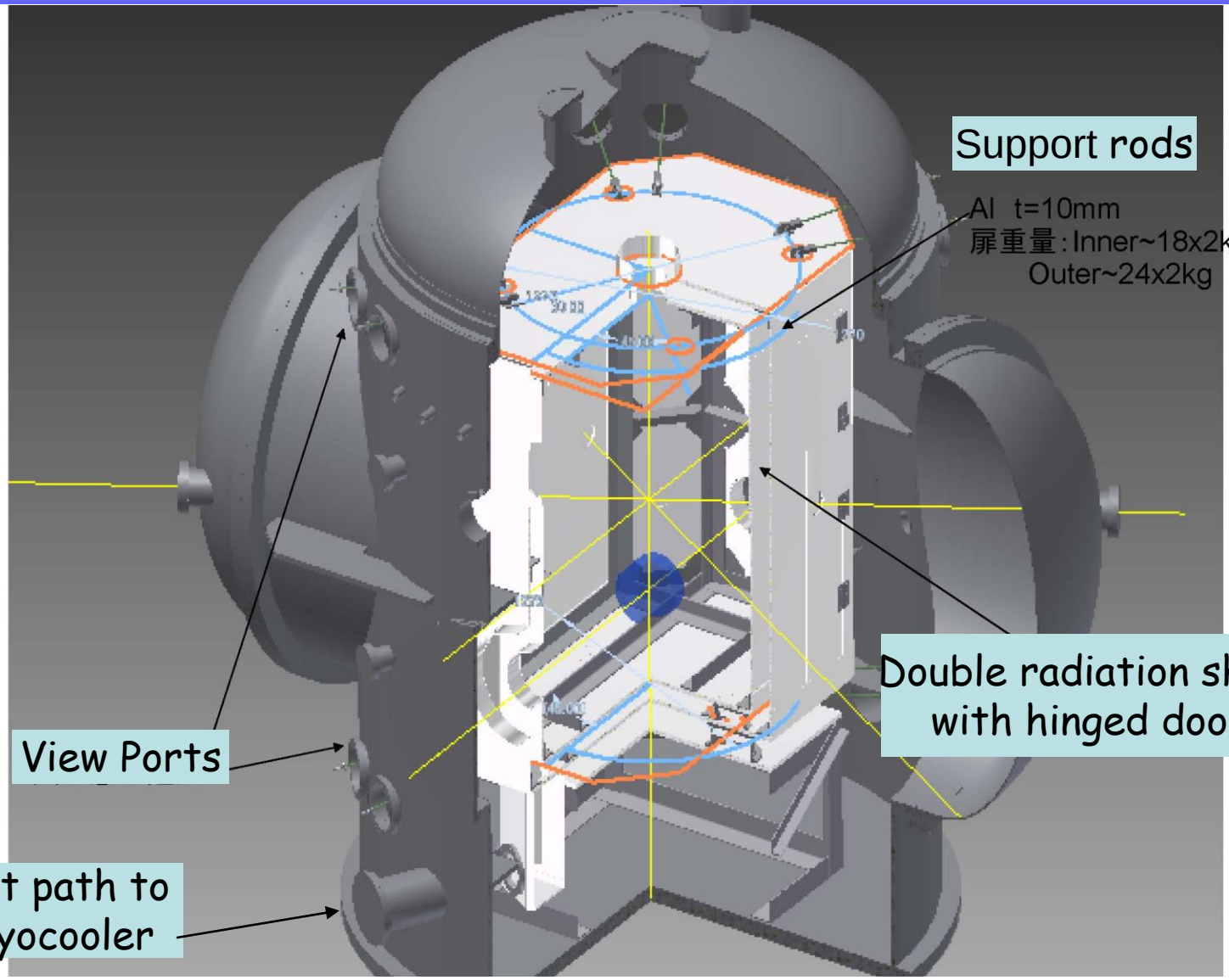

S.Koike

Estimated Heat Budget

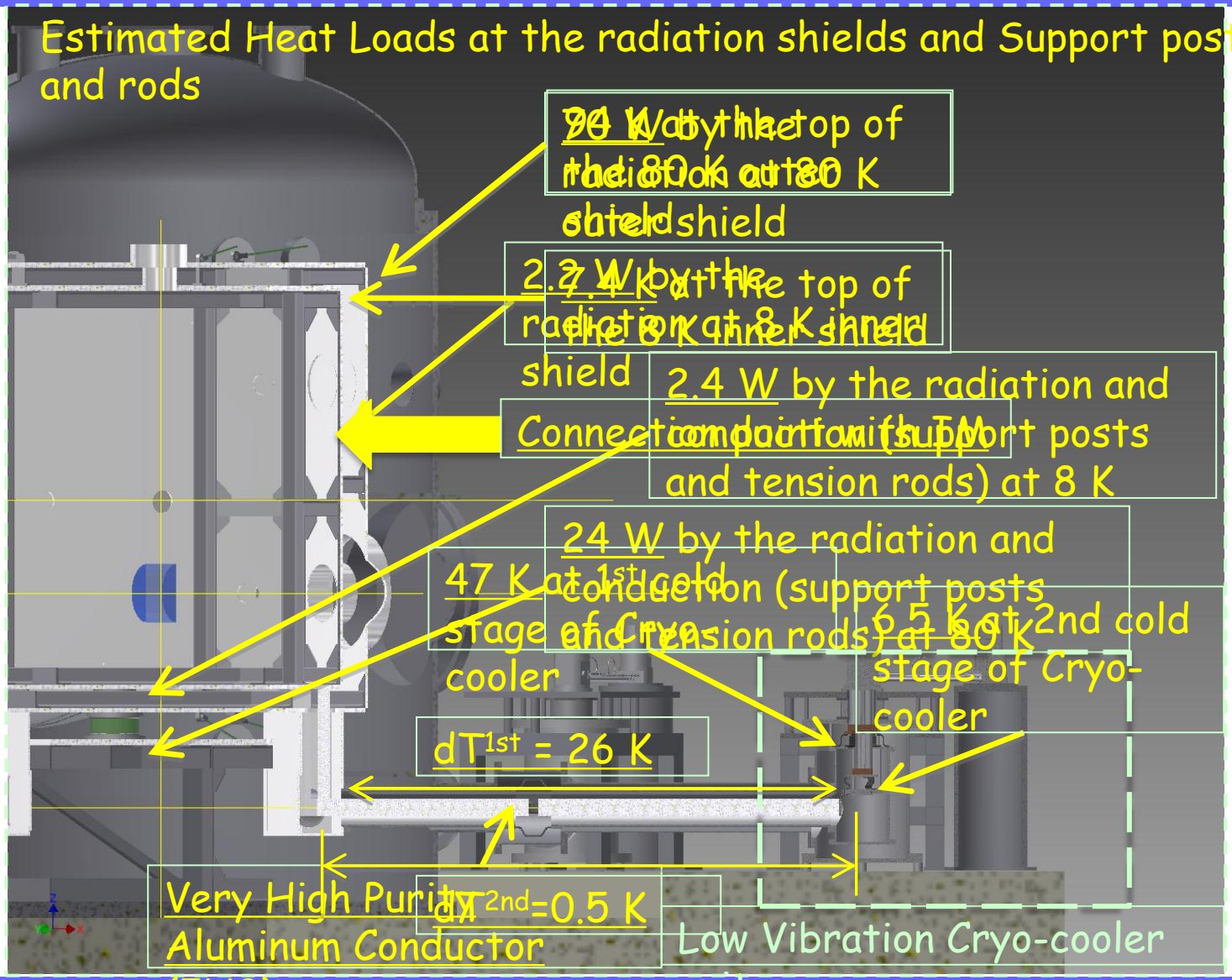

Estimated heat Budget

1st Cold stage

- Outer Shield (W)
  - Eleven View Ports 22
  - Radiation From 300 K 70
  - Support post and Rods 24
  - Electrical wires 3×10^{-4}

Total 116

W/unit 29

2nd Cold stage

- Inner Shield (W)
  - Duct Shields* (Beam and SAS) < 0.05
  - Eleven View Ports 0.4
  - Radiation From 80 K 2.2
  - Support post and Rods 2.4
  - Electrical wires 3×10^{-4}
  - Mirror Deposition 0.9
  - Scattering Light ?

Total 5.9

W/unit 1.5

Proto-type cryocooler test

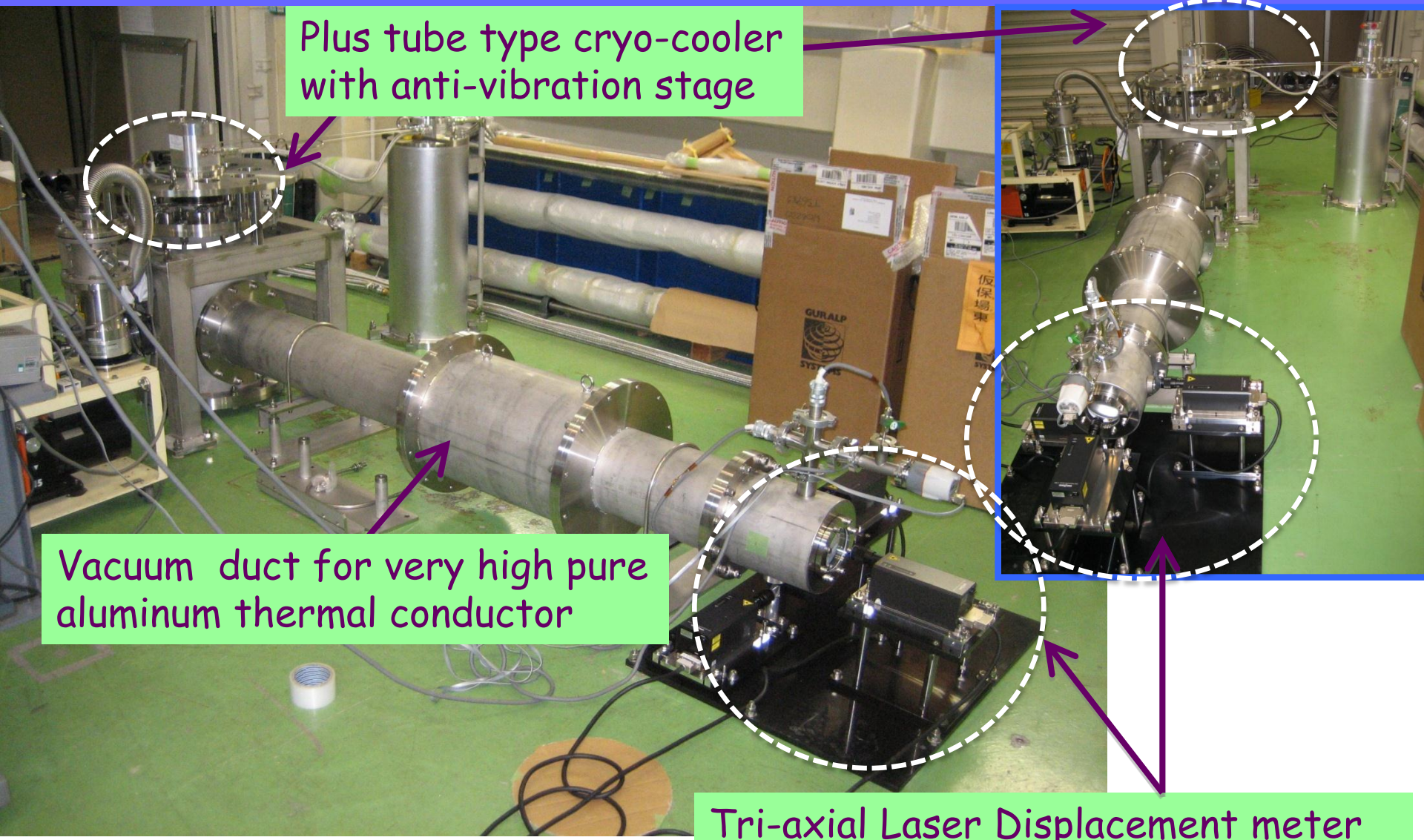

Cooling curve of Proto-type

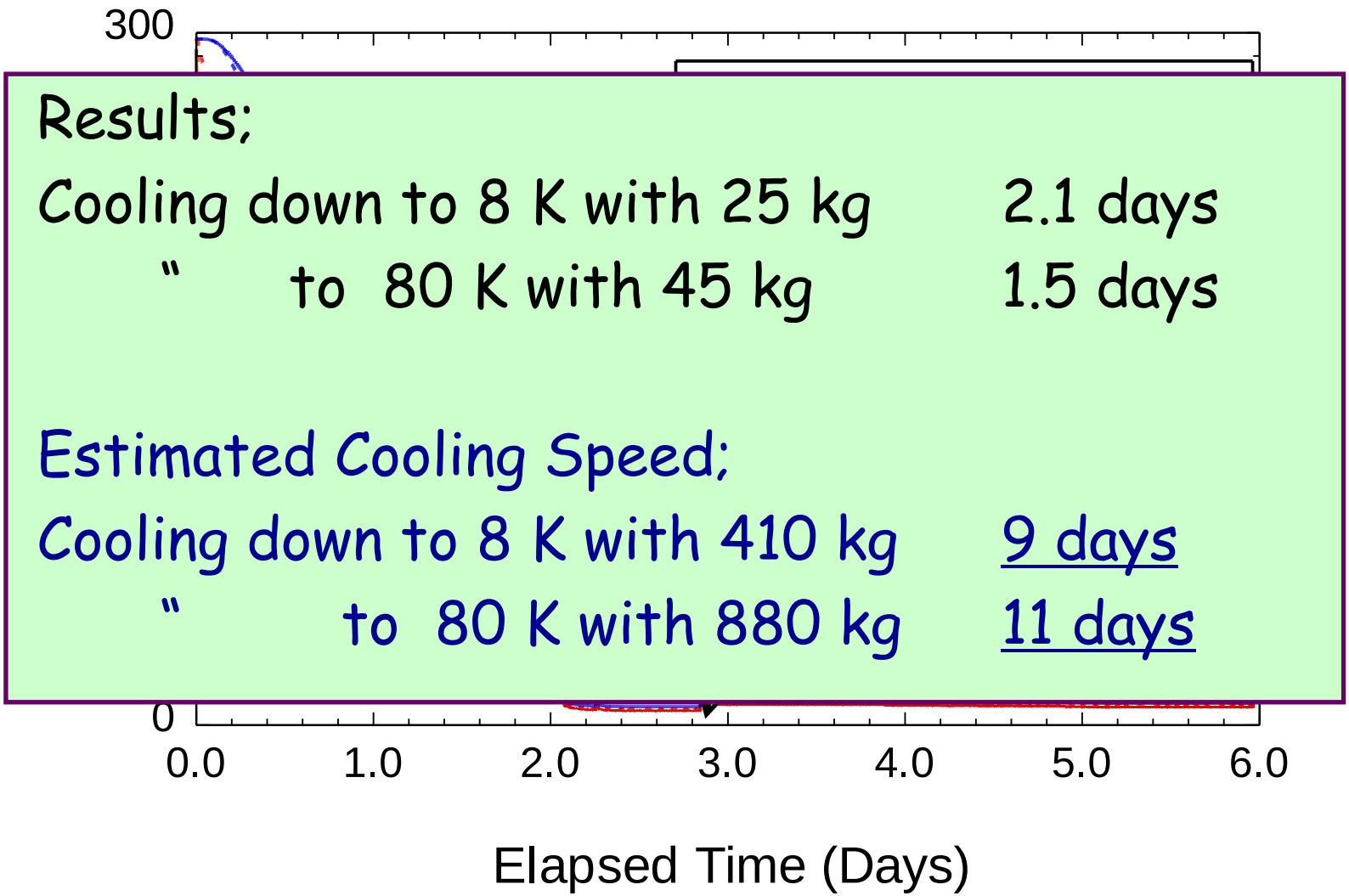

Results;

Cooling down to 8 K with 25 kg	2.1 days
" to 80 K with 45 kg	1.5 days

Estimated Cooling Speed;

Cooling down to 8 K with 410 kg	9 days
" to 80 K with 880 kg	11 days

Radiation Shield Duct Design

- to reduce 300K heat radiation to mirrors -

- Apertures of baffles change linearly

$L = 17$ m

$2a = 900$ mm, $2d_r = 800$ mm, $2d_c = 250$ mm

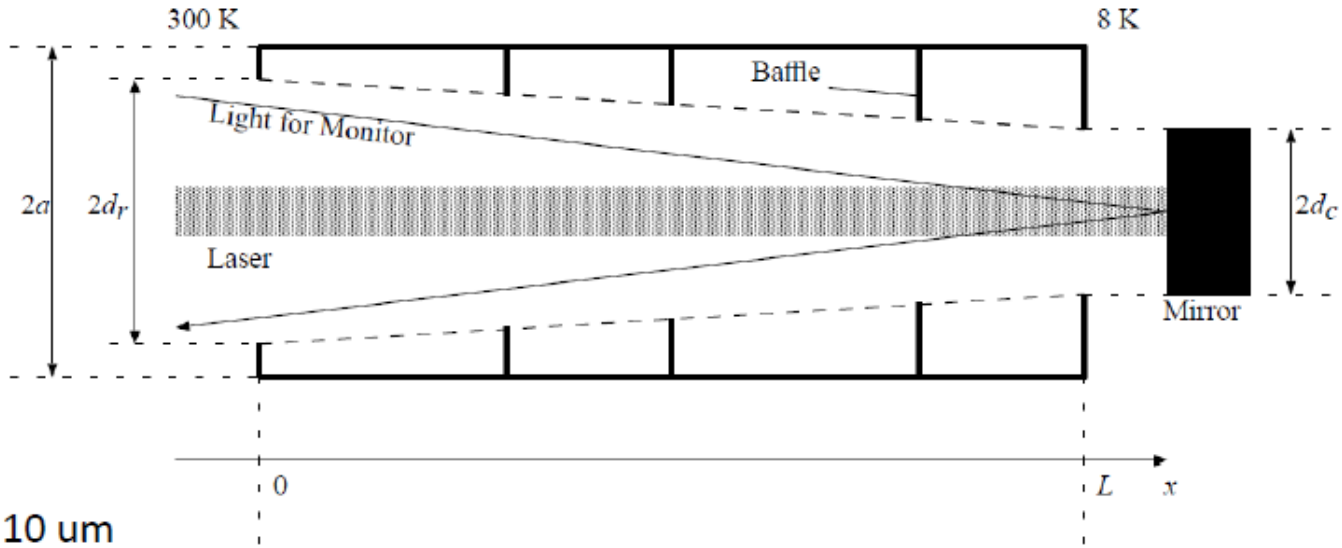

R=0.94 at 10 um

Position of baffles x/L	P[W]
No baffle	6.22
$0, \frac{8}{16}, \frac{9}{16}, \frac{10}{16}, \frac{14}{16}, 1$	0.0992

R=0.94±0.02
Worse case
R=0.96 P=0.172 W
Better case
R=0.92 P=0.0615 W

Thermal radiation can be sufficiently reduced by baffles

Sakakibara

Simulation of Inner Shield Cooling

- Model is constructed to estimate initial cooling time
- Heat is transferred by conduction in sapphire fibers and heat links and radiation
- Inner shield of 410 kg is connected to the 2nd stages of 4 cryocoolers
  - Cooling power is derived from test result of LCGT cryocooler

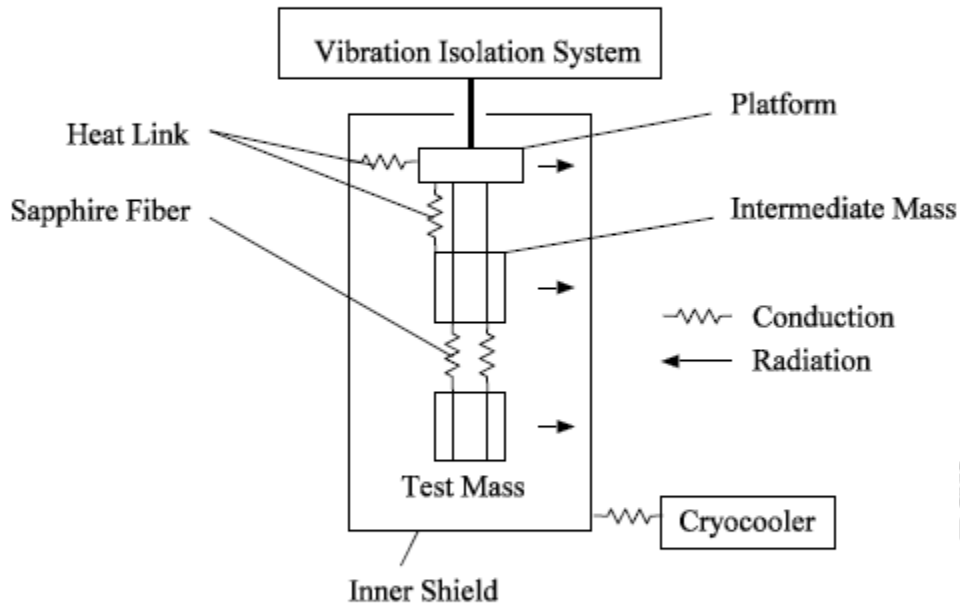

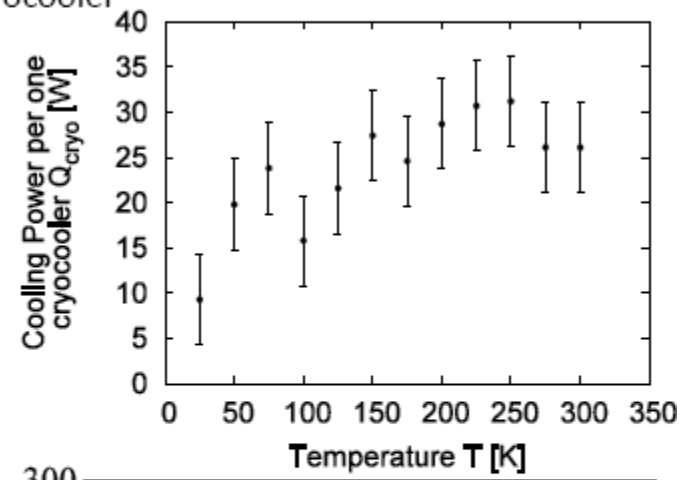

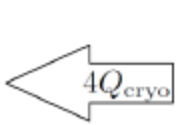

Inner Shield (Al) T_{sh}, M_{sh}

$$\frac{dT_{sh}}{dt} = -\frac{4Q_{cryo}(T_{sh})}{M_{sh}C_{Al}(T_{sh})}$$

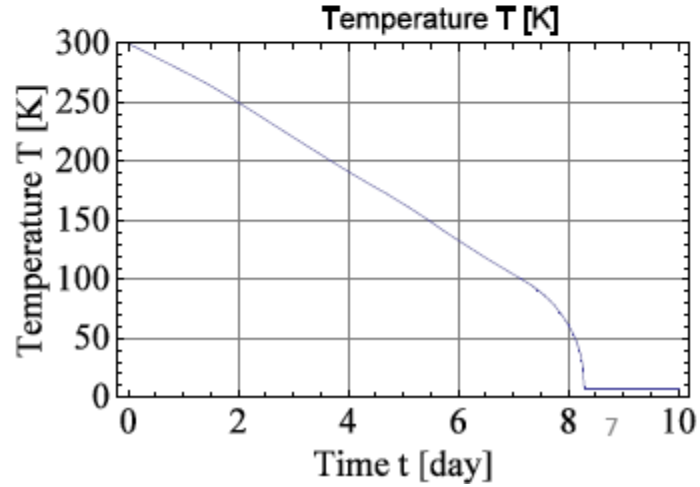

Suspension system is excluded in this case

Simulation of Test Mass Cooling

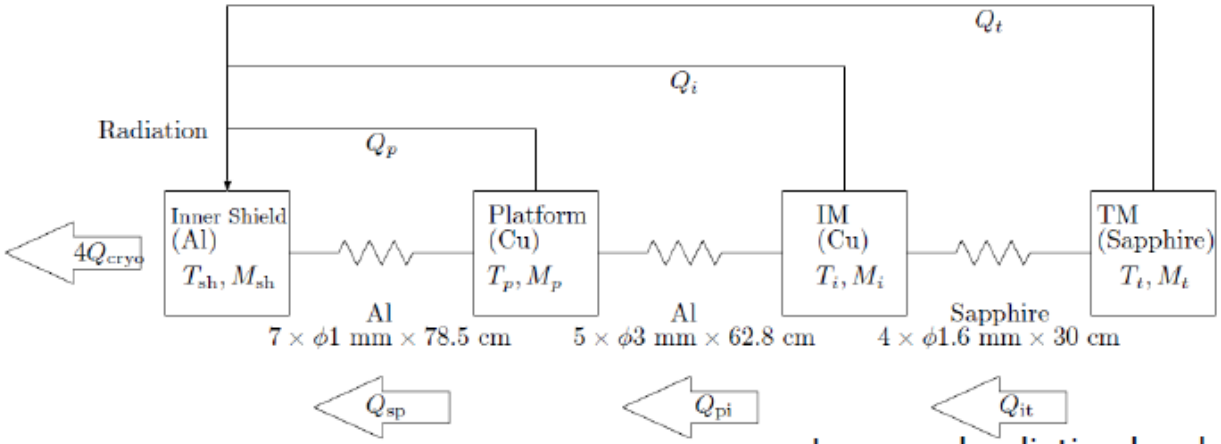

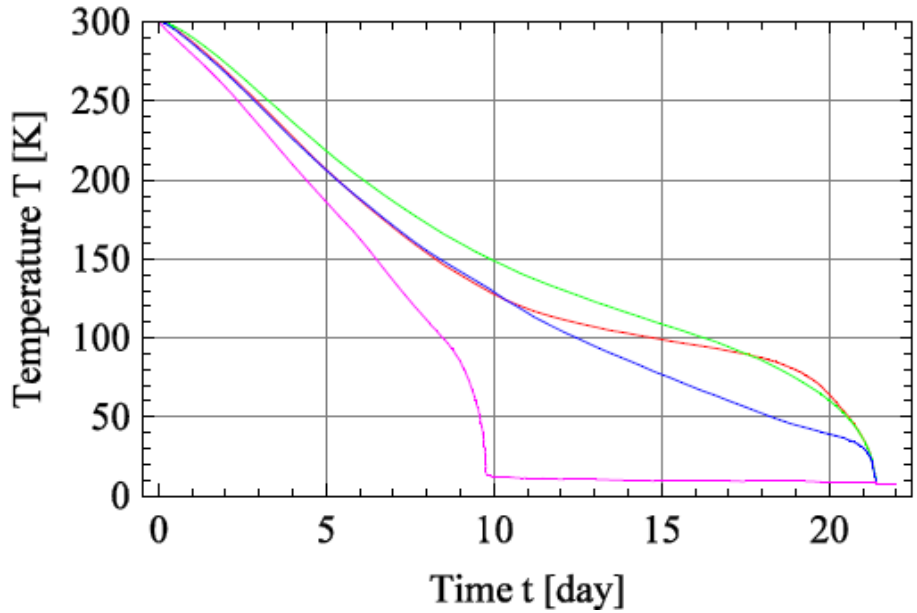

- Increased radiation by platform, intermediate mass, and inside of inner shield coated with DLC (Diamond Like Carbon)
- Absorptivity of DLC at 10 um is 0.41 (cf. emissivity of Cu and Al is 0.03)
  - We assume that it equals emissivity

TM
IM
Platform
Inner Shield

1500m Baseline IFOs in both arms

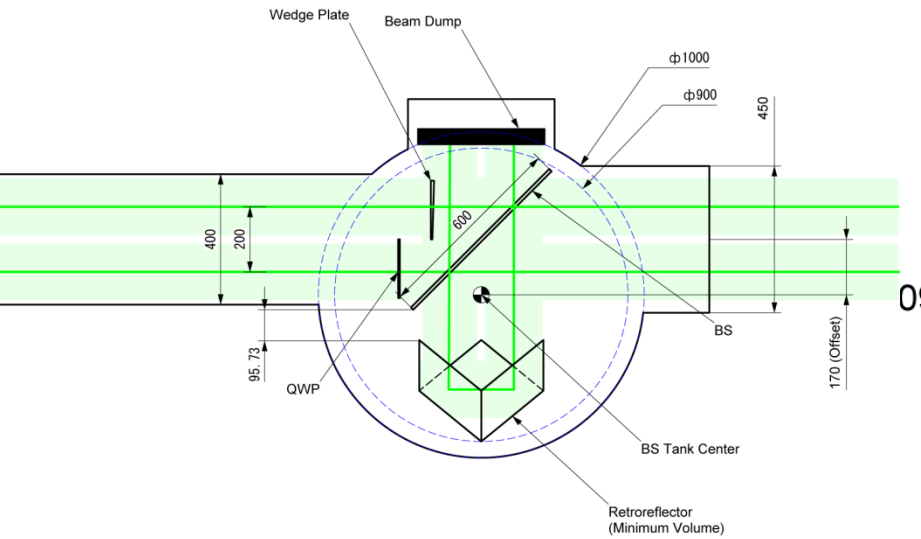

- Schedule

- 2011.10-2013.3 : Laser assemble (partially)
- 2011.10-2013.3 : Optics assemble (partially)
- 2012.11-2013.3 : Benchmark, vacuum installation (2nd tunnel)
- 09/17) 2013.3-2013.7 : Benchmark, vacuum installation (1st tunnel)
- 2013.4-2013.9 : Laser and optics installation
- 2013.4-2013.9 : Data acq. sys. Installation
- 2013.10-2014.3 : Observation

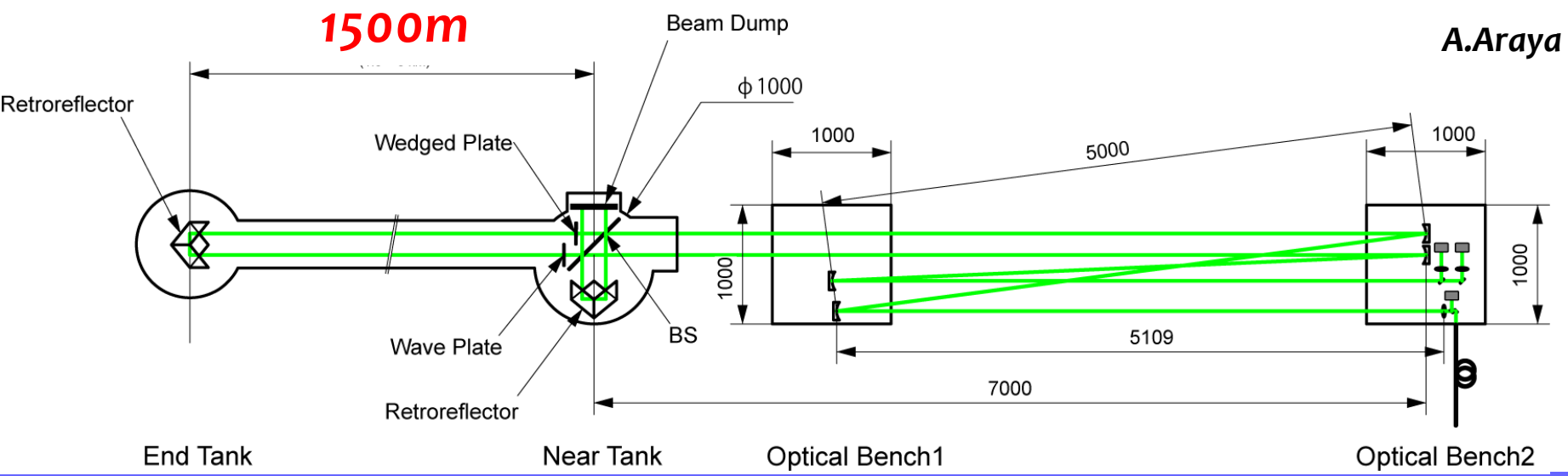

Iodine-stabilization System

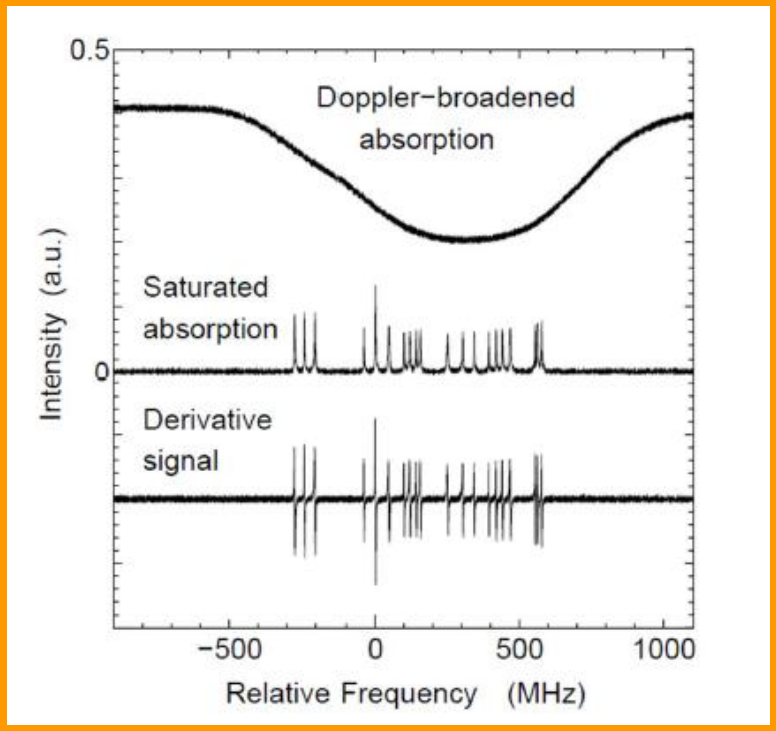

Frequency stability $dv/v \sim 10^{-13}$

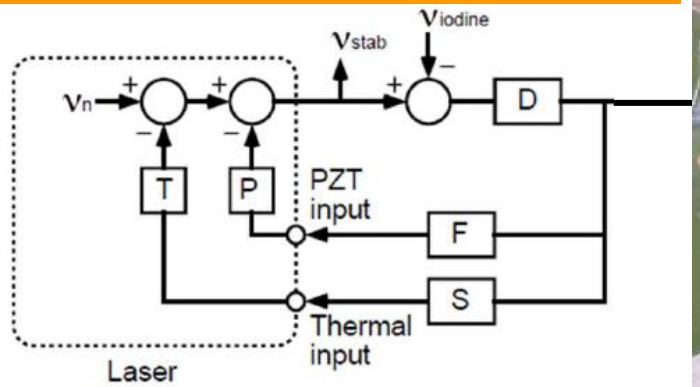

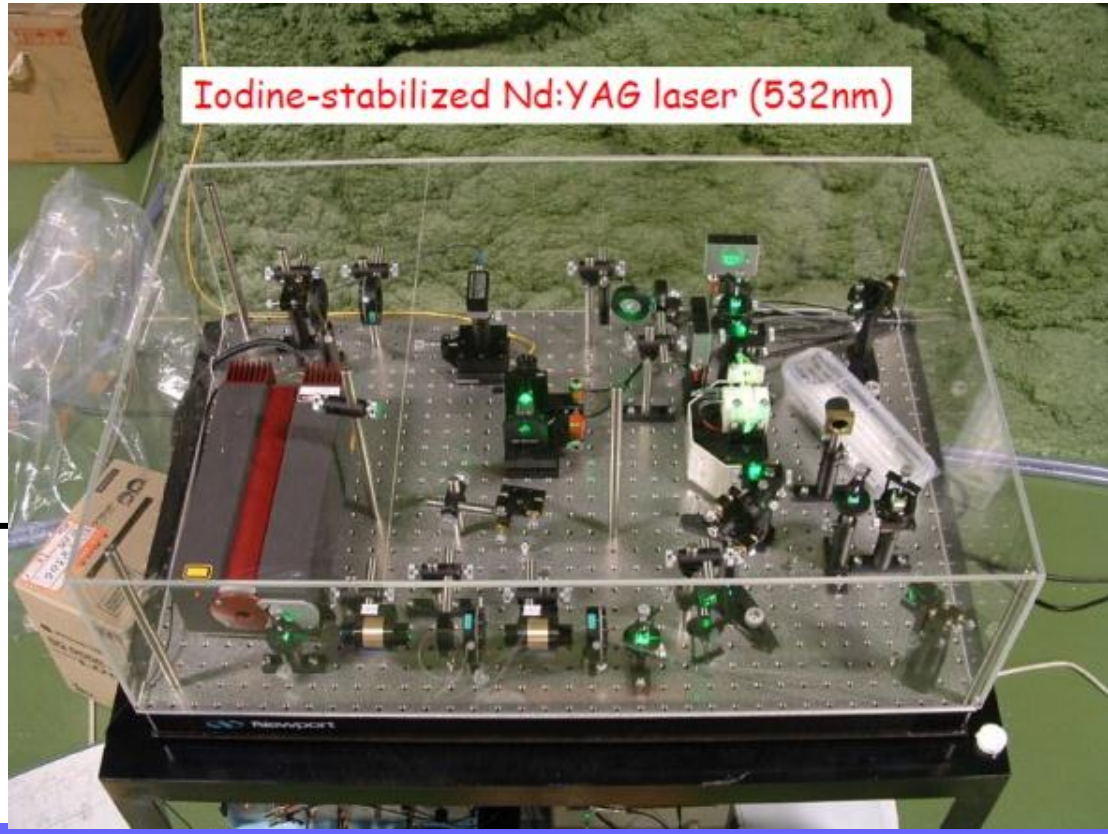

Summary

- *Fundamental techniques for LCGT have been prepared by TAMA and CLIO and LCGT Collaborators.*
- *LCGT finally started in September 2010.*
- *63% budgets was approved. A part of the rest 37% budget will be applied for 2011.*
- *Many LCGT parts are under designing.*
- *5 years construction, and 2 years commissioning are planed. We hope observation from 2017.*