EURECA : Dark Matter search with 1t of cryogenic detectors

Gilles Gerbier- CEA Saclay/IRFU
for EURECA collaboration

TAUP2011
Munich, september 7th

EURECA short history

- Foundation date : 2005 : 1st meeting in Oxford : EDELWEISS and CRESST decided to put efforts together for next generation experiment : 1 ton cryogenic multitarget exp
- 2006 : CERN, ROSEBUD joined, collaboration agreement written, WP structure set up
- 2007-2010 : Bordeaux, Kiev, Sheffield joined

France
CEA/IRFU Saclay (G Gerbier coord)
CEA/IRAMIS Saclay
CNRS/Neel Grenoble
CNRS/CSNSM Orsay
CNRS/IPNL Lyon
CNRS/IAS Orsay
CNRS/ICMCB Bordeaux

Spain
Zaragoza

Ukraine
Kiev

United Kingdom
Oxford
Sheffield

Germany
MPI für Physik, Munich
Technische Universität München
Universität Tübingen
Karlsruhe Institute of Technology

International
JINR Dubna
CERN

Around 115 members (65 FTE) currently on Edelweiss, Cresst, Rosebud and others

EURECA main features

- To reach low part of SUSY space need 20 years or **1t**
- Multitarget : Ge, scintillators : allows redondancy , A^2 dependence check
- Good resolution, low thresholds, high discrimination against background : EDWII, CRESST (300g to 800g unit)
- For Germanium : high intrinsic purity
- But to see **few evts/t.y**, need significant improvements in background
- Staged approach
  - EURECA 1 = 150 kg
  - EURECA 2 = 1t

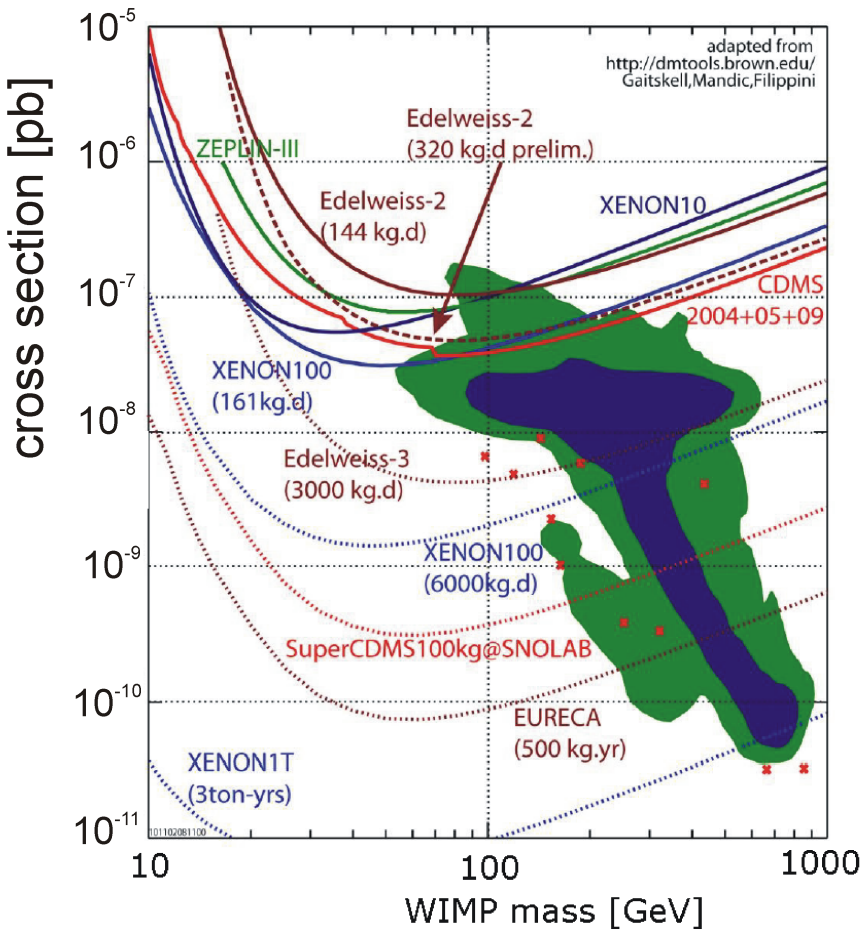

Typical actual performances

Experiment	Threshold (Erecoil) for DM search	FWHM @ threshold keVr or keVm	Background rate in ROI fid mass
Edelweiss	20 keV	Eph 1 keV – Er 5 keV	≈> 1/100 kg.d
CRESST	≈ 12 keV	Eph < 1 keV	≈ 1/10 kg.d
CDMS	10 keV	Eph <1 keV- Er 2 keV	≈< 1/100 kg.d
Xenon100	S1 8 keV	S1 ≈ 9.5 keV	≈ 1/400 kg.d
CDMS LE	2 keV	0.5 keV	few /kg.d
Edelweiss LE "pure heat"	2 keV	0.8 keV	≈ 10 /kg.d
EURECA goal	*2 to 8 keV*	*few keV*	*≈1/ 100 000 kg.d*
Xenon1t	*S1 16 keV ?*	*S1 ≈ 19 keV ?*	*≈1/ 100 000 kg.d*

- What is influence of threshold value and resolution at threshold ?
- How to decrease by 100-1000 background rate in ROI ?

Effect of threshold (Ge and Xe)

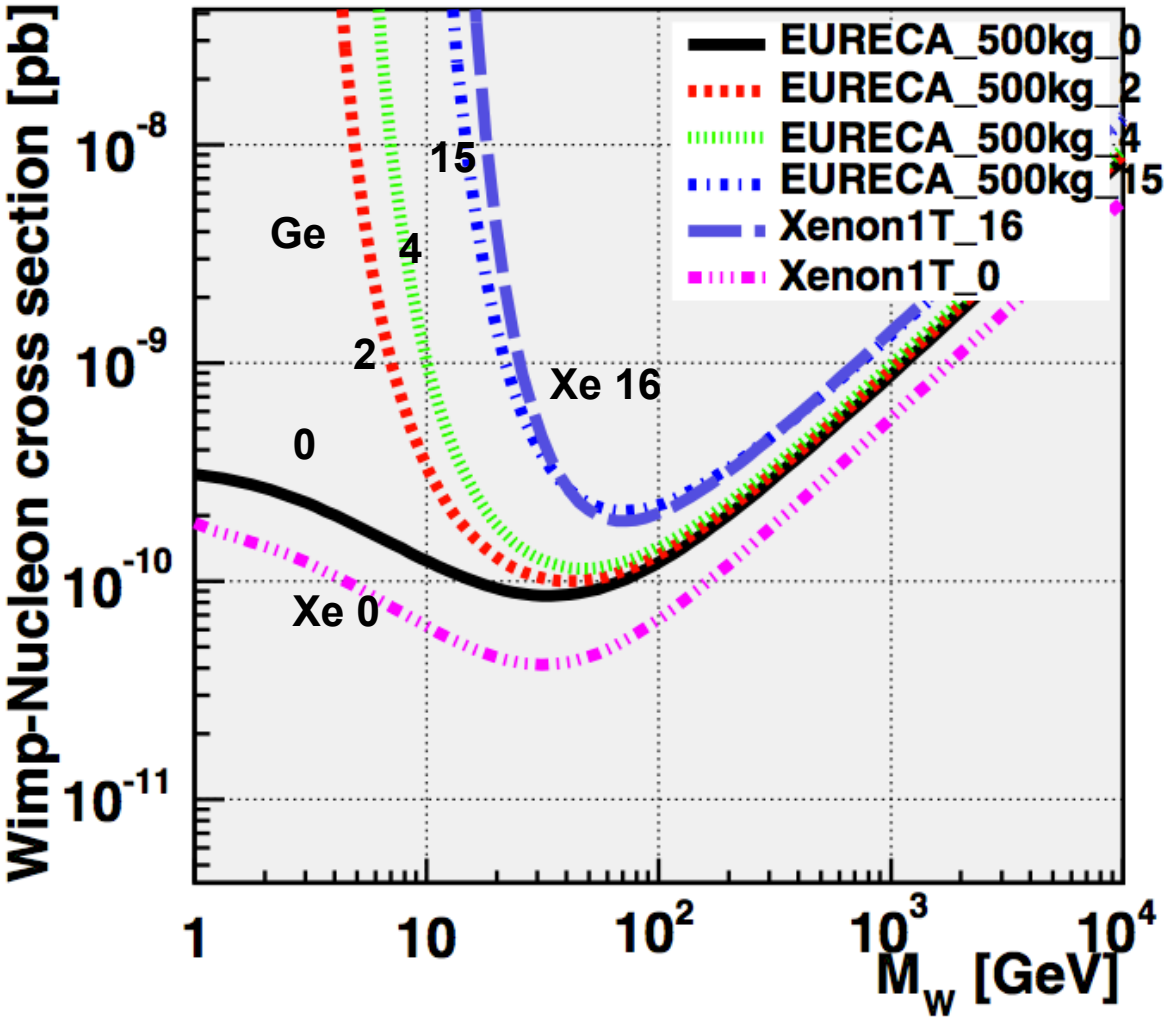

50 000 kg.d

http://pisrv0.pit.physik.uni-tuebingen.de/darkmatter/

Effect of resolution at threshold : Xenon100

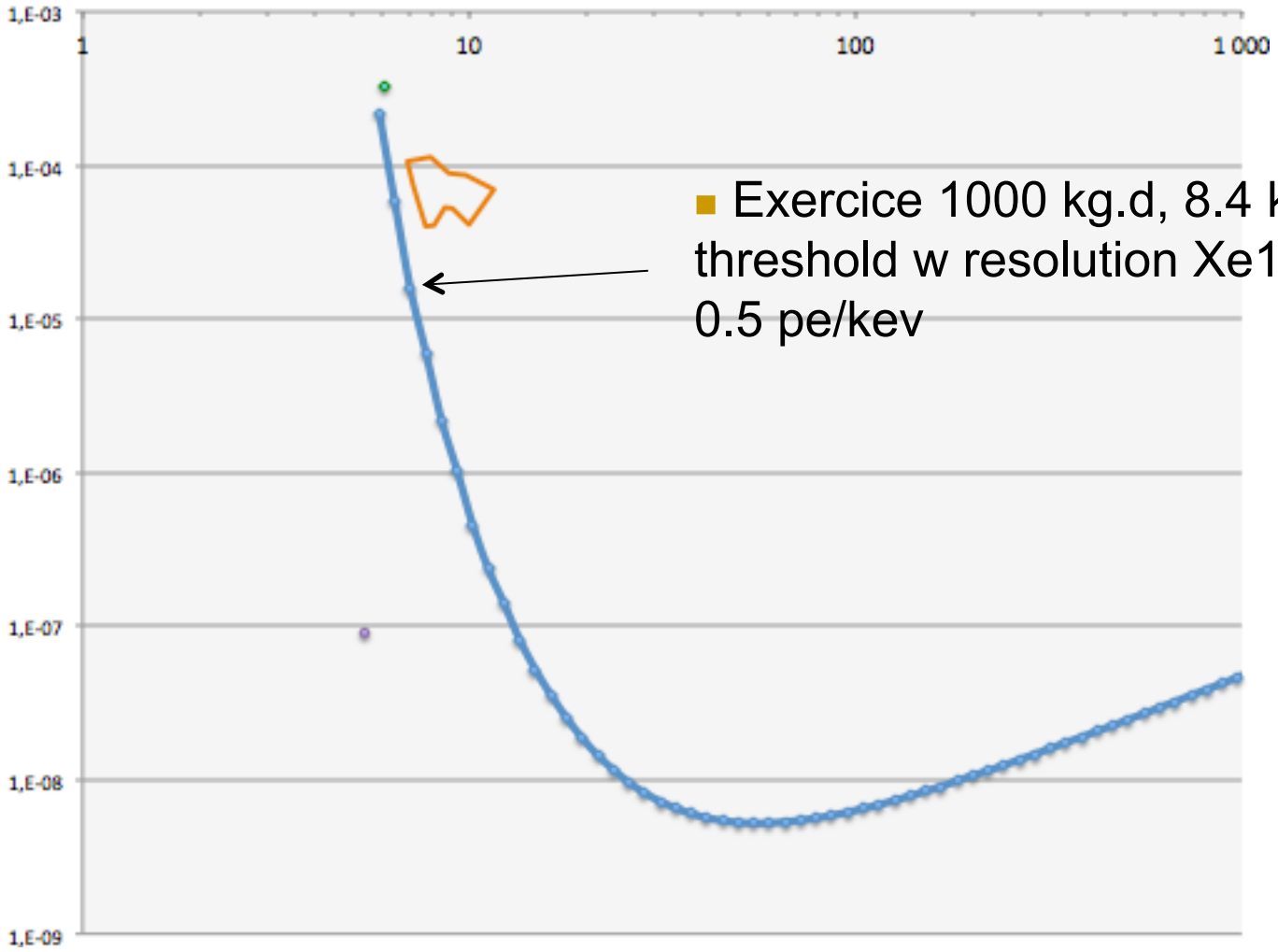

- Exercice 1000 kg.d, 8.4 keV threshold w resolution Xe100 0.5 pe/kev

Effect of resolution at threshold : Xenon100

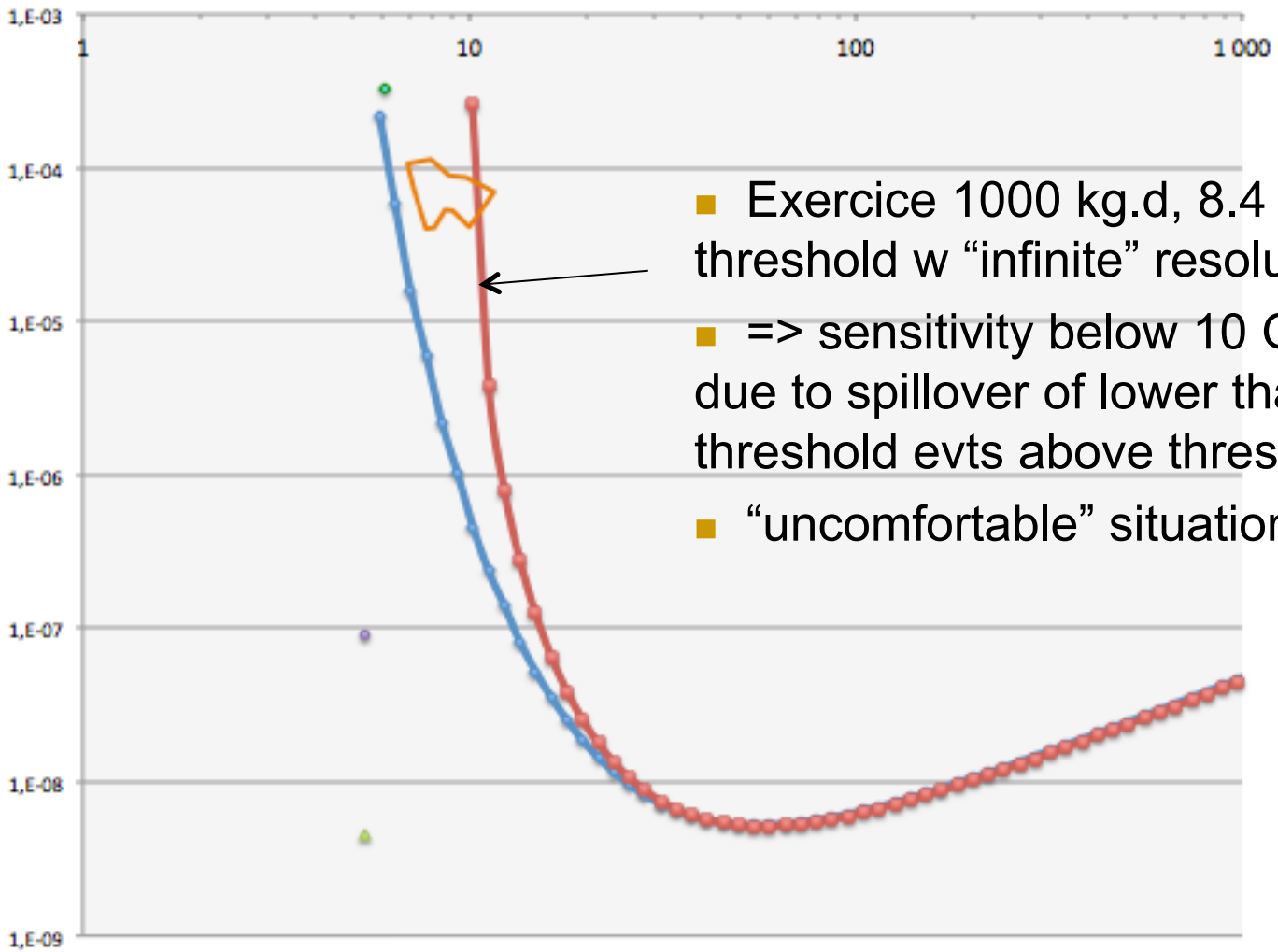

- Exercice 1000 kg.d, 8.4 keV threshold w “infinite” resolution
- => sensitivity below 10 GeV due to spillover of lower than threshold evts above threshold
- “uncomfortable” situation

Fraction of signal sensitivity vs mass : Xenon 100

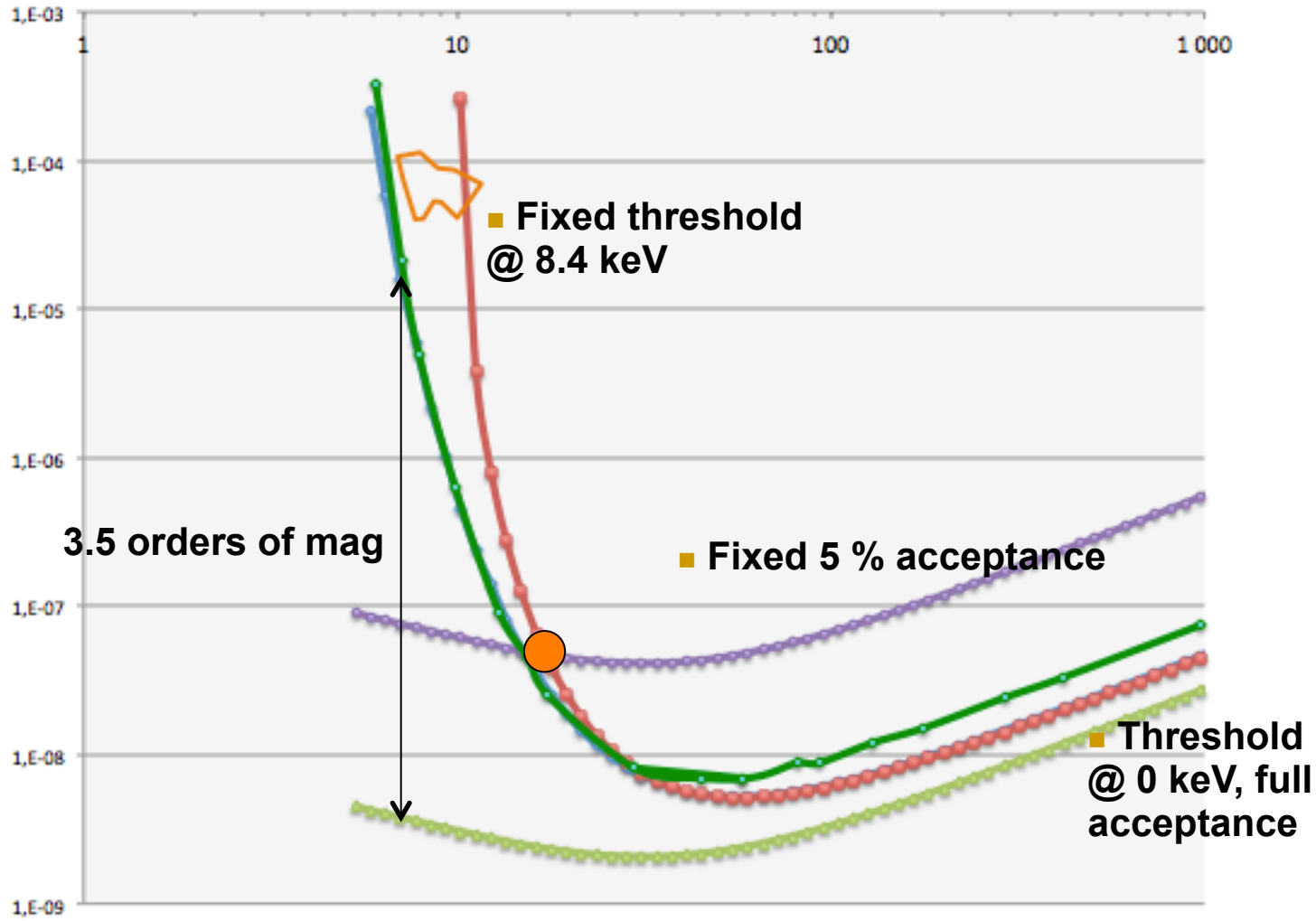

- => May be worth setting minimum mass ("WIMP safe") above which

Either see more than 1 % of exp signal and increase of sensitivity wrt th <2

“Exercise” with EURECA1/Ge & Xenon1t

- EURECA 150kg, 300 d
thresh@4keV, FWHM 2 keV
70 % eff
- Xe1t , 300 d
thresh@16keV, FWHM 19 keV
50 %eff
- No evt

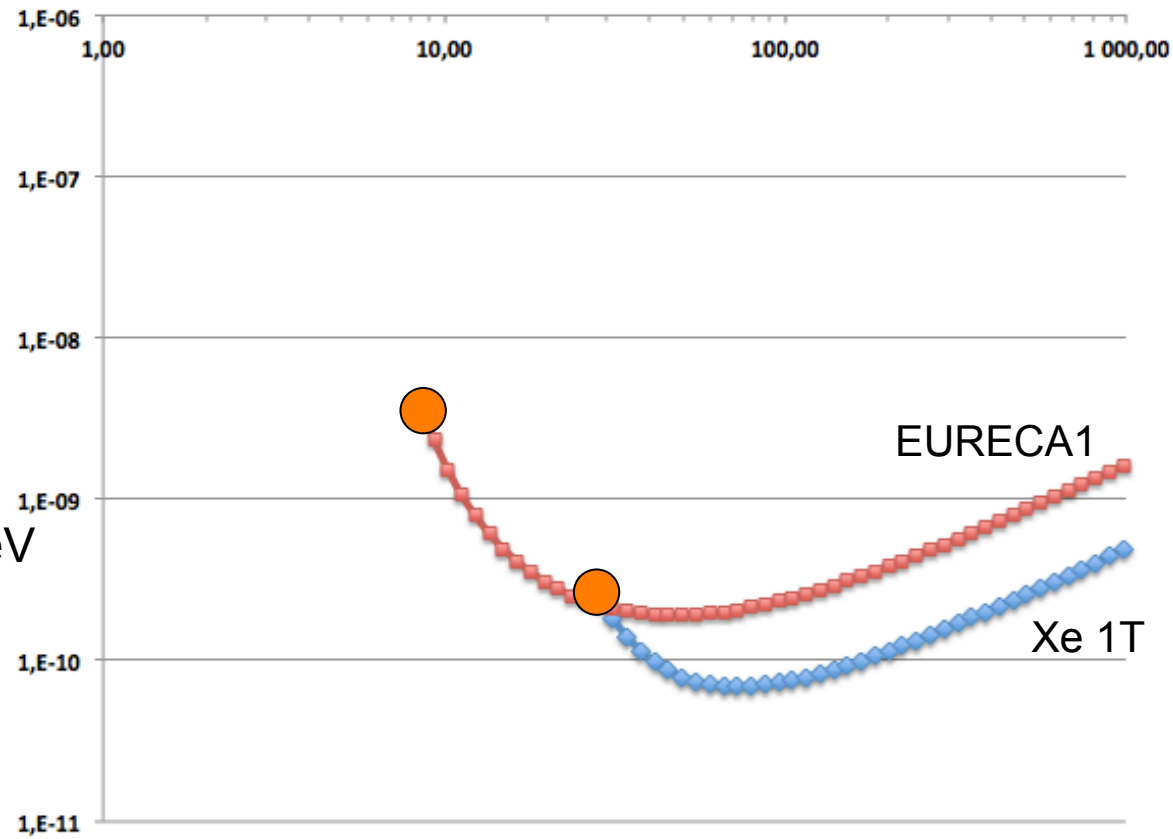

- Same game could be played with CaWO4
  - => complementarity low-high wimp mass
  - In any case, X check of hint of signal is essential

Detector developments

- Edelweiss III and CRESST are test bench for EURECA (detectors + electronics, cabling …)
- New phonon sensors for redondancy in rejection and low threshold: “meanders”, cooper pair box, qubit device…
- New cabling & first stage amplification : HEMT
- Go to 1.2 kg (Ge and scintillators)
- Ge industrial production investigated and found feasible
- New geometry for scintillating crystals to eliminate background, R&D on purity ongoing

- Cost estimation EURECA 1
  - Cost of cryogenic set up w shield : 4.6 M€
  - Cost of 150 kg of Ge detectors + electronics : 4 M€

EURECA : getting low background

- Essential to go deep underground
  - Deepest EU is LSM (4800 mwe)
  - Possibility ? Yes, see later
- Use of dedicated materials : copper
  - Upper limit on concentration set by current rejection factors and target count rate
  - … other materials
- Neutrons : water shield & VETO
  - … local neutrons
- => OK with moderate improvment of rejection (for Ge), still need improved active background rejection

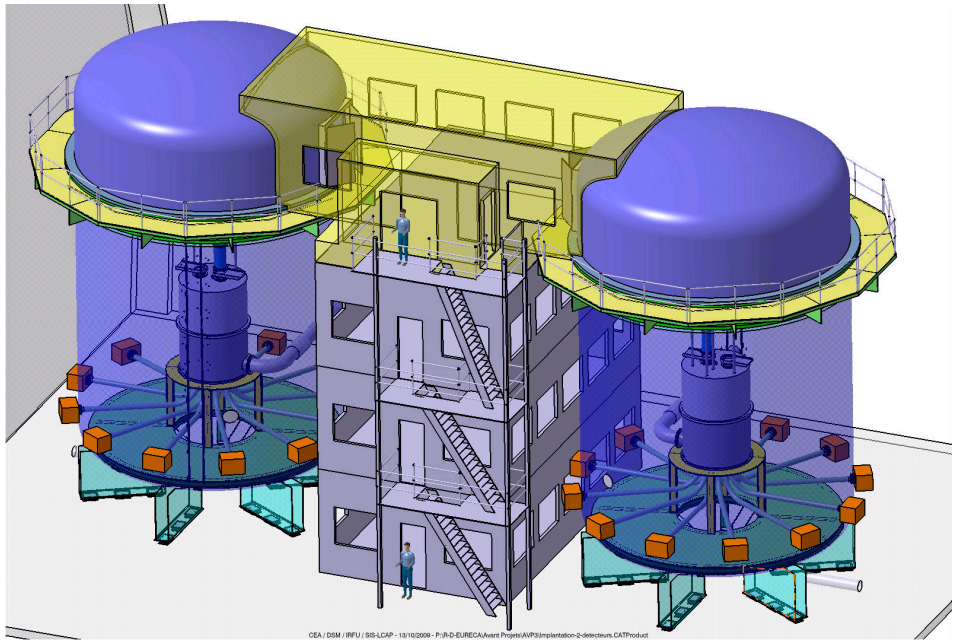

EURECA status

- Design study -ASPERA partial funding- on going
  - Simulations => Shieldings
  - Cryogenics line defined
  - Studies for wiring / electronics on going
  - Implantation and needs @ LSM extension defined

- Going to CDR and TDR by 2012
- Timeline

Project	09	10	11	12	13	14	15	16	17	18	19
CDR/ASPERA D. Study											
TDR											
Decision											
Construction I (150 kg)											
Exploitation I											
Construction II (1 ton)											
Exploitation II											

Cooling system

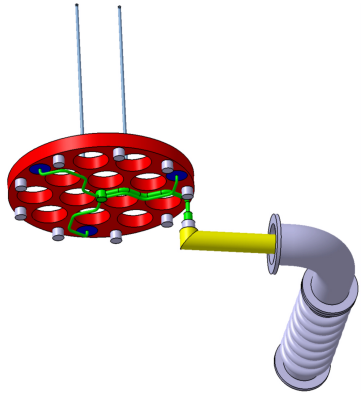

Cryostat inside large water tank
Cooling by pipes with cold gaz or liquid flow
No cryogenic devices inside the shield
No vibrations / no radioactivity

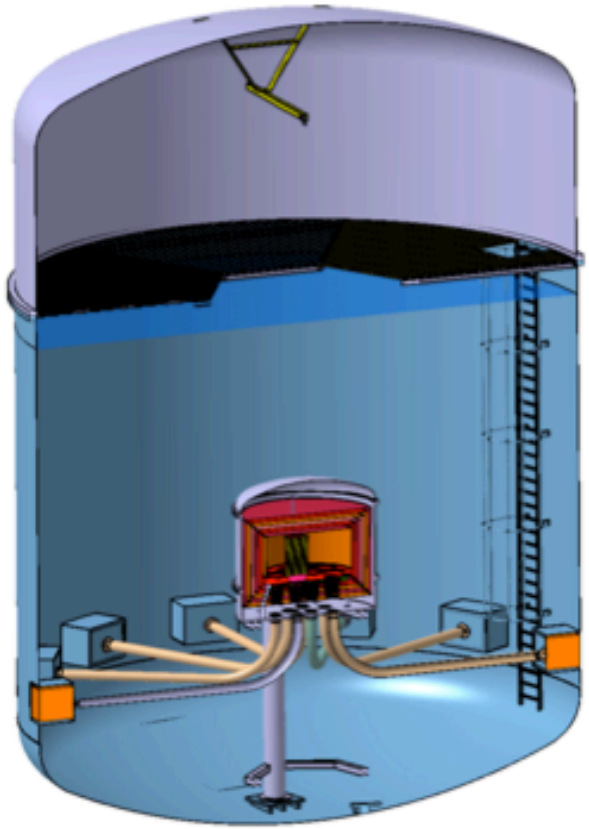

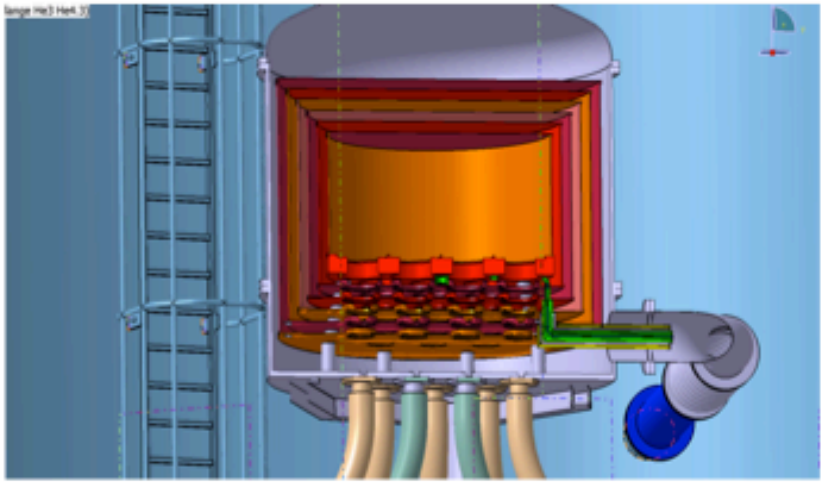

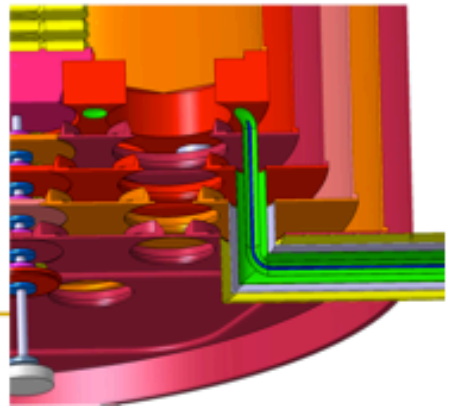

Cryostat : detector arrangements

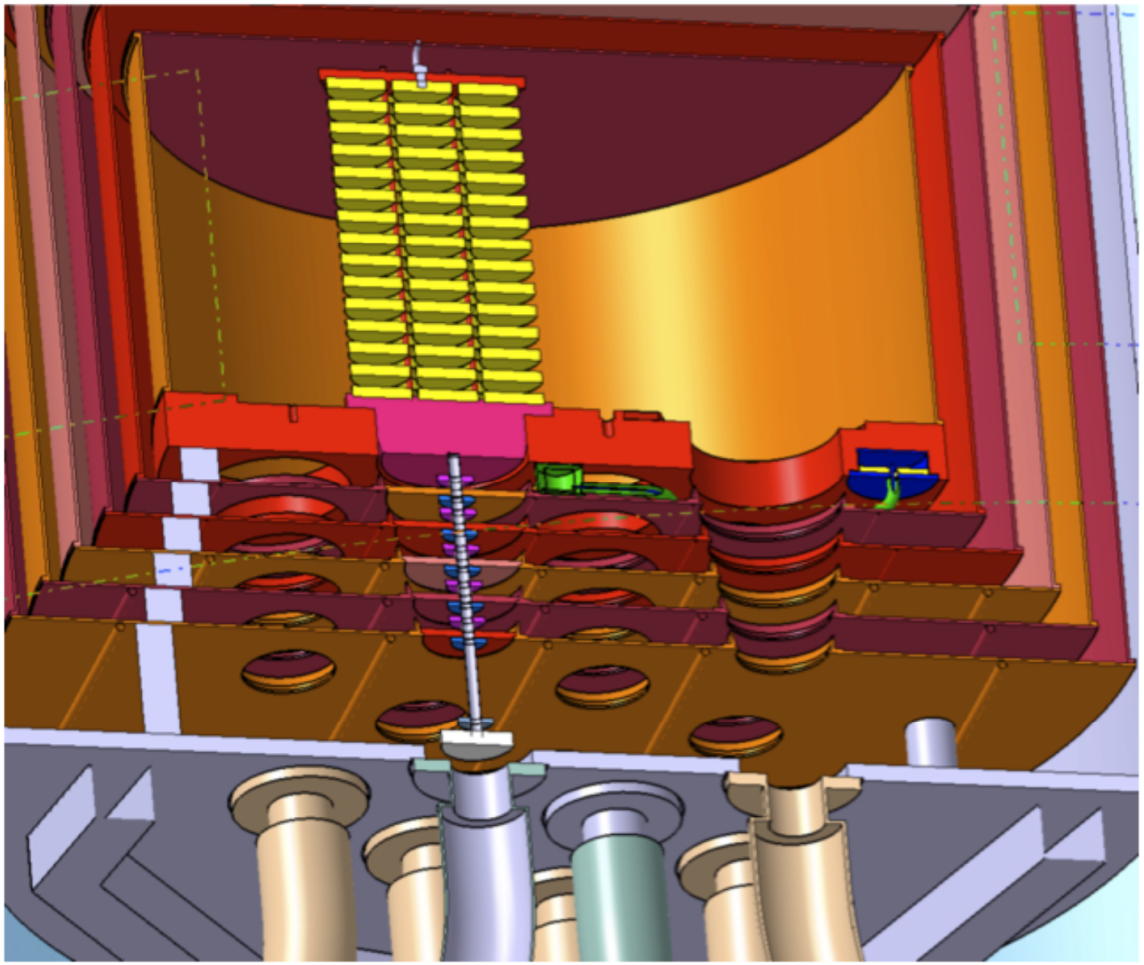

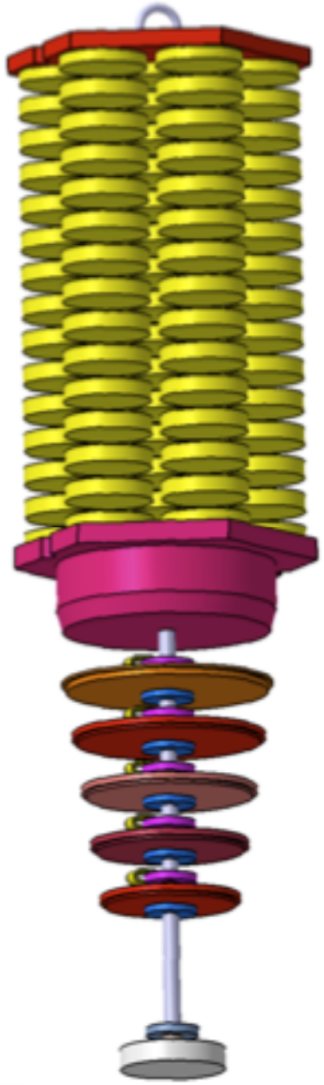

Clamping mechanism at 300K (1000 pins)

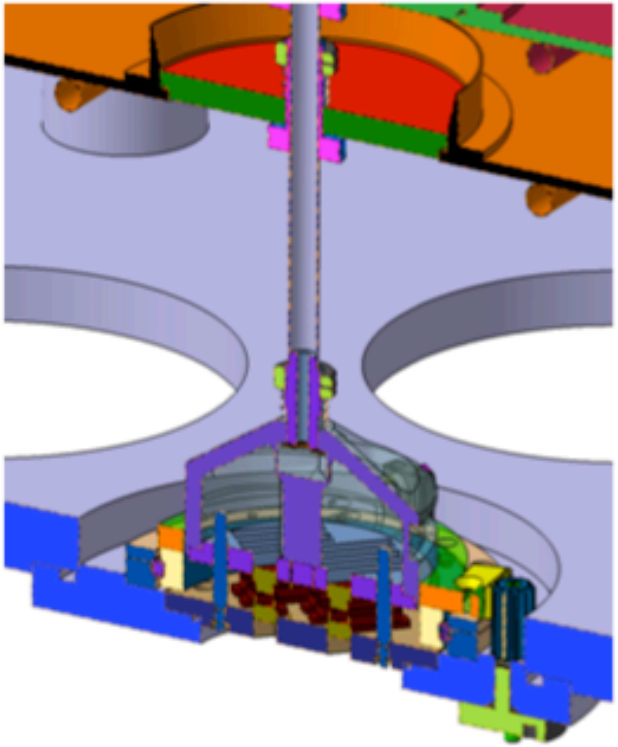

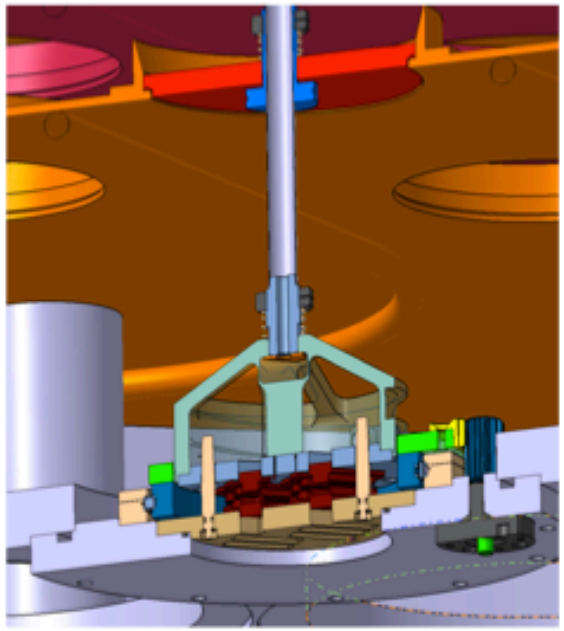

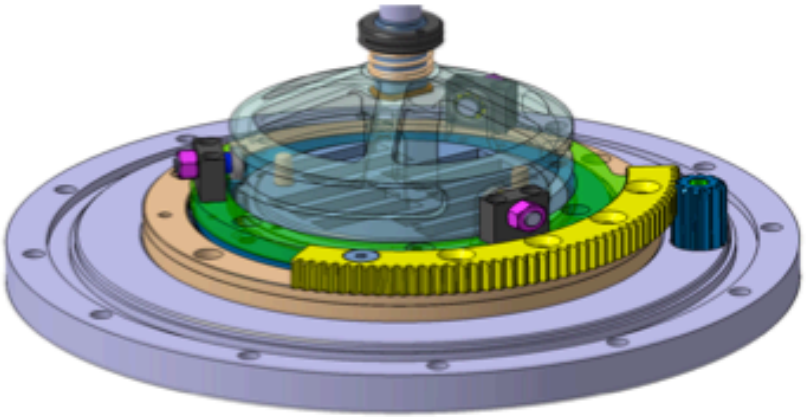

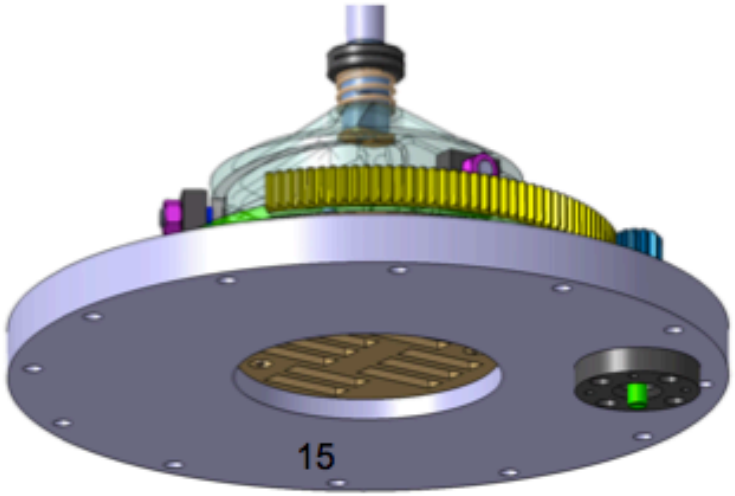

Tower electronic and cabling : multiusers

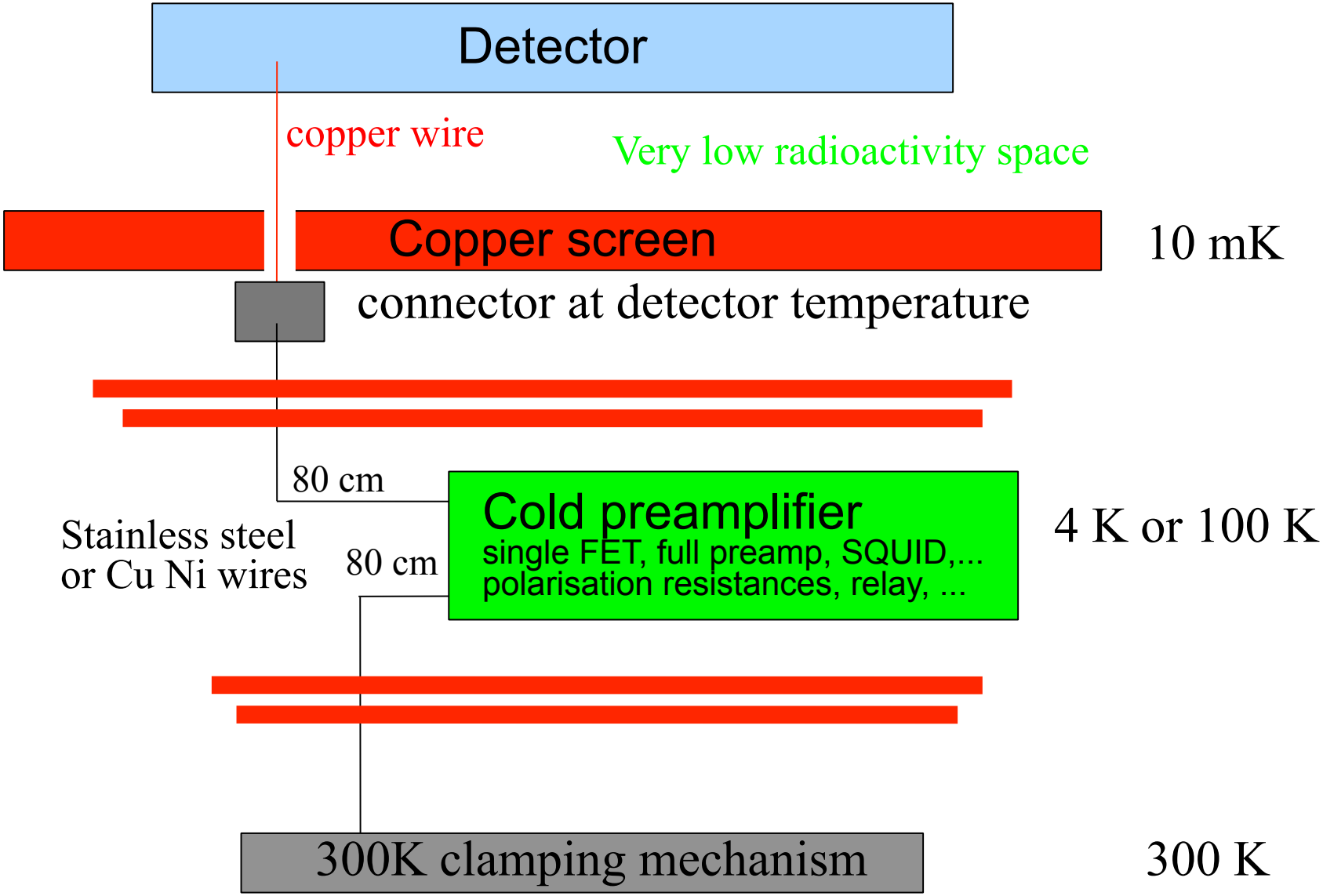

Current status of new cavity and plans

- Safety galery digging started oct10 (600m), TBM now on site (20 m/day)
- Process of evaluation of extension of lab & funding ongoing, recommendation by ministry to provide facilities for users
- Within french EQUIPEX program call , request for equipment and facilities for new lab
- Large cryogenic facility could also be used by other DM search users and rare process search like ββ search
- Result by beginning 2012
- If ok, ready for users 2015

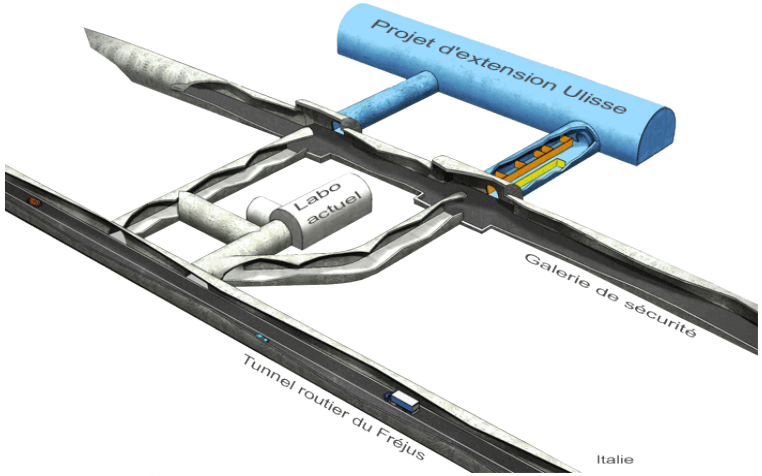

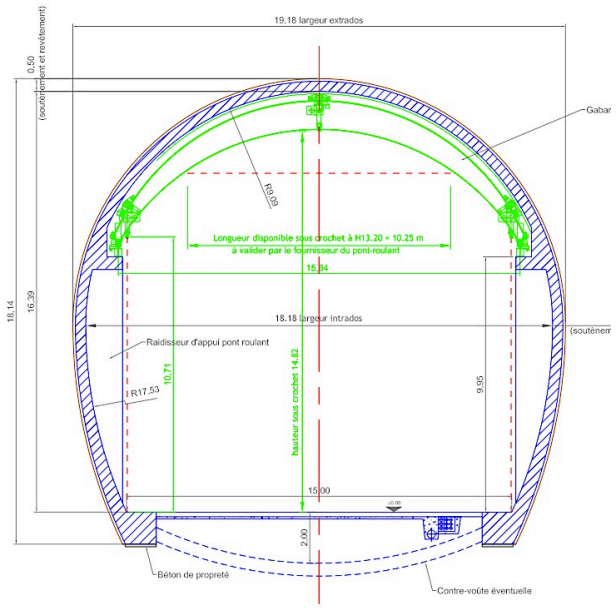

Summary

- Important progress in EU cryogenic experiments Edelweiss, CRESST, Rosebud-R&D, & effective US collaboration (meeting oct 2011) towards >100-1000 kg
- Complementarity of cryogenics w Xenon techniques
- Versatility of cryogenic detectors & sensors make them adapted to ambitious aims
- Large (500kg-1t) cryogenic, low activity, versatile (electronics) set-up is a key tool for 10^{-10} pb SI aim:
  - Developed within EURECA
  - Part of the key french application for LSM extension
- Longer term projects : DARWIN, Multiton Xenon, … welcome to express interest in new lab @ LSM